APPENDIX E

Noise Analysis

Prepared by Rincon Consultants

<Organization?>
<Analysis By?>

11 November 2016
TNM 2.5
Calculated with TNM 2.5

RESULTS: SOUND LEVELS
PROJECT/CONTRACT: El Monte Specific Plan
RUN: Existing
BARRIER DESIGN: INPUT HEIGHTS

Average pavement type shall be used unless a State highway agency substantiates the use of a different type with approval of FHWA.

ATMOSPHERICS: 20 deg C, 50% RH

Receiver Name	No.	#DUs	Existing Lden	No Barrier Lden Calculated	Crit'n	Increase over existing Calculated	Crit'n Sub'l Inc	Type Impact	With Barrier Calculated Lden	Noise Reduction Calculated	Goal	Calculated minus Goal
			dBA	dBA	dBA	dB	dB		dBA	dB	dB	dB
SR 1 - Residence	1	1	0.0	72.8	66	72.8	10	Snd Lvl	72.8	0.0	8	-8.0
SR 2 - Park	3	1	0.0	71.7	66	71.7	10	Snd Lvl	71.7	0.0	8	-8.0
SR 3 - Commercial	5	1	0.0	73.2	66	73.2	10	Snd Lvl	73.2	0.0	8	-8.0
SR 4 - Commercial	7	1	0.0	71.9	66	71.9	10	Snd Lvl	71.9	0.0	8	-8.0
SR 5 - Commercial	9	1	0.0	71.1	66	71.1	10	Snd Lvl	71.1	0.0	8	-8.0
SR 6 - Commercial	11	1	0.0	73.5	66	73.5	10	Snd Lvl	73.5	0.0	8	-8.0
SR 7 - Residence	13	1	0.0	64.4	66	64.4	10	----	64.4	0.0	8	-8.0
SR 8 - Adult School	15	1	0.0	63.0	66	63.0	10	----	63.0	0.0	8	-8.0
SR 9 - Columbia School	17	1	0.0	71.3	66	71.3	10	Snd Lvl	71.3	0.0	8	-8.0
SR 10 - Commercial	19	1	0.0	65.5	66	65.5	10	----	65.5	0.0	8	-8.0
SR 11 - Residences	21	1	0.0	70.6	66	70.6	10	Snd Lvl	70.6	0.0	8	-8.0
SR 12 - Residences	23	1	0.0	64.3	66	64.3	10	----	64.3	0.0	8	-8.0
SR 13 - Residences	25	1	0.0	65.5	66	65.5	10	----	65.5	0.0	8	-8.0

Dwelling Units	# DUs	Noise Reduction Min	Avg	Max
		dB	dB	dB
All Selected	13	0.0	0.0	0.0
All Impacted	8	0.0	0.0	0.0
All that meet NR Goal	0	0.0	0.0	0.0

<Organization?>
<Analysis By?>

11 November 2016
TNM 2.5
Calculated with TNM 2.5

RESULTS: SOUND LEVELS
PROJECT/CONTRACT: El Monte Specific Plan
RUN: 2020 No TOD Projects
BARRIER DESIGN: INPUT HEIGHTS
ATMOSPHERICS: 20 deg C, 50% RH

Average pavement type shall be used unless a State highway agency substantiates the use of a different type with approval of FHWA.

Receiver Name	No.	#DUs	Existing Lden	No Barrier Lden Calculated	Crit'n	Increase over existing Calculated	Crit'n Sub'l Inc	Type Impact	With Barrier Calculated Lden	Noise Reduction Calculated	Goal	Calculated minus Goal
			dBA	dBA	dBA	dB	dB		dBA	dB	dB	dB
SR 1 - Residence	1	1	0.0	73.5	66	73.5	10	Snd Lvl	73.5	0.0	8	-8.0
SR 2 - Park	3	1	0.0	72.4	66	72.4	10	Snd Lvl	72.4	0.0	8	-8.0
SR 3 - Commercial	5	1	0.0	74.2	66	74.2	10	Snd Lvl	74.2	0.0	8	-8.0
SR 4 - Commercial	7	1	0.0	72.9	66	72.9	10	Snd Lvl	72.9	0.0	8	-8.0
SR 5 - Commercial	9	1	0.0	71.8	66	71.8	10	Snd Lvl	71.8	0.0	8	-8.0
SR 6 - Commercial	11	1	0.0	74.0	66	74.0	10	Snd Lvl	74.0	0.0	8	-8.0
SR 7 - Residence	13	1	0.0	65.0	66	65.0	10	----	65.0	0.0	8	-8.0
SR 8 - Adult School	15	1	0.0	63.5	66	63.5	10	----	63.5	0.0	8	-8.0
SR 9 - Columbia School	17	1	0.0	71.5	66	71.5	10	Snd Lvl	71.5	0.0	8	-8.0
SR 10 - Commercial	19	1	0.0	66.1	66	66.1	10	Snd Lvl	66.1	0.0	8	-8.0
SR 11 - Residences	21	1	0.0	71.3	66	71.3	10	Snd Lvl	71.3	0.0	8	-8.0
SR 12 - Residences	23	1	0.0	65.0	66	65.0	10	----	65.0	0.0	8	-8.0
SR 13 - Residences	25	1	0.0	66.1	66	66.1	10	Snd Lvl	66.1	0.0	8	-8.0

Dwelling Units	# DUs	Noise Reduction Min	Avg	Max
		dB	dB	dB
All Selected	13	0.0	0.0	0.0
All Impacted	10	0.0	0.0	0.0
All that meet NR Goal	0	0.0	0.0	0.0

<Organization?>
<Analysis By?>

11 November 2016
TNM 2.5
Calculated with TNM 2.5

RESULTS: SOUND LEVELS
PROJECT/CONTRACT: El Monte Specific Plan
RUN: 2020 With TOD Projects
BARRIER DESIGN: INPUT HEIGHTS

Average pavement type shall be used unless a State highway agency substantiates the use of a different type with approval of FHWA.

ATMOSPHERICS: 20 deg C, 50% RH

Receiver Name	No.	#DUs	Existing Lden	No Barrier Lden Calculated	Crit'n	Increase over existing Calculated	Crit'n Sub'l Inc	Type Impact	With Barrier Calculated Lden	Noise Reduction Calculated	Goal	Calculated minus Goal
			dBA	dBA	dBA	dB	dB		dBA	dB	dB	dB
SR 1 - Residence	1	1	0.0	74.3	66	74.3	10	Snd Lvl	74.3	0.0	8	-8.0
SR 2 - Park	3	1	0.0	73.0	66	73.0	10	Snd Lvl	73.0	0.0	8	-8.0
SR 3 - Commercial	5	1	0.0	74.5	66	74.5	10	Snd Lvl	74.5	0.0	8	-8.0
SR 4 - Commercial	7	1	0.0	73.3	66	73.3	10	Snd Lvl	73.3	0.0	8	-8.0
SR 5 - Commercial	9	1	0.0	72.0	66	72.0	10	Snd Lvl	72.0	0.0	8	-8.0
SR 6 - Commercial	11	1	0.0	74.5	66	74.5	10	Snd Lvl	74.5	0.0	8	-8.0
SR 7 - Residence	13	1	0.0	66.9	66	66.9	10	Snd Lvl	66.9	0.0	8	-8.0
SR 8 - Adult School	15	1	0.0	65.6	66	65.6	10	----	65.6	0.0	8	-8.0
SR 9 - Columbia School	17	1	0.0	72.0	66	72.0	10	Snd Lvl	72.0	0.0	8	-8.0
SR 10 - Commercial	19	1	0.0	66.9	66	66.9	10	Snd Lvl	66.9	0.0	8	-8.0
SR 11 - Residences	21	1	0.0	71.7	66	71.7	10	Snd Lvl	71.7	0.0	8	-8.0
SR 12 - Residences	23	1	0.0	65.6	66	65.6	10	----	65.6	0.0	8	-8.0
SR 13 - Residences	25	1	0.0	66.4	66	66.4	10	Snd Lvl	66.4	0.0	8	-8.0

Dwelling Units	# DUs	Noise Reduction Min	Avg	Max
		dB	dB	dB
All Selected	13	0.0	0.0	0.0
All Impacted	11	0.0	0.0	0.0
All that meet NR Goal	0	0.0	0.0	0.0

<Organization?>
<Analysis By?>

11 November 2018
TNM 2.5
Calculated with TNM 2.5

RESULTS: SOUND LEVELS
PROJECT/CONTRACT: El Monte Specific Plan
RUN: 2035 No TOD Projects
BARRIER DESIGN: INPUT HEIGHTS

Average pavement type shall be used unless a State highway agency substantiates the use of a different type with approval of FHWA.

ATMOSPHERICS: 20 deg C, 50% RH

Receiver Name	No.	#DUs	Existing Lden	No Barrier Lden Calculated	Crit'n	Increase over existing Calculated	Crit'n Sub'l Inc	Type Impact	With Barrier Calculated Lden	Noise Reduction Calculated	Goal	Calculated minus Goal
			dBA	dBA	dBA	dB	dB		dBA	dB	dB	dB
SR 1 - Residence	1	1	0.0	73.8	66	73.8	10	Snd Lvl	73.8	0.0	8	-8.0
SR 2 - Park	3	1	0.0	72.7	66	72.7	10	Snd Lvl	72.7	0.0	8	-8.0
SR 3 - Commercial	5	1	0.0	74.5	66	74.5	10	Snd Lvl	74.5	0.0	8	-8.0
SR 4 - Commercial	7	1	0.0	73.2	66	73.2	10	Snd Lvl	73.2	0.0	8	-8.0
SR 5 - Commercial	9	1	0.0	72.1	66	72.1	10	Snd Lvl	72.1	0.0	8	-8.0
SR 6 - Commercial	11	1	0.0	74.3	66	74.3	10	Snd Lvl	74.3	0.0	8	-8.0
SR 7 - Residence	13	1	0.0	65.3	66	65.3	10	----	65.3	0.0	8	-8.0
SR 8 - Adult School	15	1	0.0	63.9	66	63.9	10	----	63.9	0.0	8	-8.0
SR 9 - Columbia School	17	1	0.0	71.8	66	71.8	10	Snd Lvl	71.8	0.0	8	-8.0
SR 10 - Commercial	19	1	0.0	66.4	66	66.4	10	Snd Lvl	66.4	0.0	8	-8.0
SR 11 - Residences	21	1	0.0	71.6	66	71.6	10	Snd Lvl	71.6	0.0	8	-8.0
SR 12 - Residences	23	1	0.0	65.3	66	65.3	10	----	65.3	0.0	8	-8.0
SR 13 - Residences	25	1	0.0	66.4	66	66.4	10	Snd Lvl	66.4	0.0	8	-8.0

Dwelling Units	# DUs	Noise Reduction Min	Avg	Max
		dB	dB	dB
All Selected	13	0.0	0.0	0.0
All Impacted	10	0.0	0.0	0.0
All that meet NR Goal	0	0.0	0.0	0.0

APPENDIX F

Traffic Impact Study

Prepared by Evan Brooks Associates

TRAFFIC IMPACT STUDY

CITY OF EL MONTE DOWNTOWN MAIN STREET TRANSIT-ORIENTED DEVELOPMENT SPECIFIC PLAN

EL MONTE, CALIFORNIA

♦♦♦♦♦♦♦♦♦♦♦♦♦♦♦♦♦♦♦♦

Prepared for

City of El Monte

11333 Valley Boulevard
El Monte, CA 91731

♦♦♦♦♦♦♦♦♦♦♦♦♦♦♦♦♦♦♦♦

Prepared by

Evan Brooks Associates, Inc.

1030 Arroyo Parkway
Suite 106
Pasadena, CA 91105
Tel: 626-799-8011

Under the Supervision of:
M. Yunus Rahi, Ph.D, P.E, T.E
Registered Civil and Traffic Engineer

December 12, 2016

EBA2014-07/YR

TRAFFIC IMPACT STUDY

CITY OF EL MONTE DOWNTOWN MAIN STREET TRANSIT-ORIENTED DEVELOPMENT SPECIFIC PLAN EL MONTE, CALIFORNIA

TABLE OF CONTENTS

TITLE	PAGE
Preparer's Certification	v
Executive Summary	vi
Introduction	1
Report Methodology	2
Project Description	6
Existing 2016 Conditions	6
Future 2020 Conditions	15
TOD Specific Plan Projects	24
Project Impacts	32
Future 2035 Conditions	34
Congestion Management Program Analysis	40
Mitigation Measures	41
Project Alternatives	45
Caltrans Freeway Facilities Analysis	53

TABLE OF CONTENTS (Contd.)

TABLES

NO.	TITLE	PAGE
1.	Level of Service Definitions	3
2.	Level of Service Criteria	4
3.	Existing 2016 Intersection Level of Service	12
4.	Existing 2016 Roadway Segment Level of Service	13
5.	List of Related Projects	16
6.	Trip Generation by Related Projects	20
7.	Future 2020 Intersection Level of Service without TOD Projects	23
8.	Trip Generation by TOD Projects	26
9.	Future 2020 Intersection Level of Service with TOD Projects	31
10.	Future 2020 Intersection Level of Service with and without TOD Projects	33
11.	2035 (Cumulative) Intersection Level of Service with and without TOD Projects	37
12.	2035 (Ambient) Intersection Level of Service with and without TOD Projects	39
13.	Project Alternatives	46
14.	Trip Generation by Project Alternatives	48
15.	Comparison of Trips Generation by Project and Alternatives	52
16.	HCM Level of Service Criteria for Caltrans Intersections	54
17.	Existing 2016 Level of Service at Freeway Ramp Intersections	57
18.	Future 2020 Level of Service at Freeway Ramp Intersections	62
19.	Future 2035 Level of Service at Freeway Ramp Intersections	65
20.	Project Impacts on Freeway Off-Ramps	67
21.	Project Impacts on Freeway On-Ramps	69
22.	LOS and Density Ranges for State Highway Facilities	71
23.	Caltrans Freeway Segments Volume and Flow Rate Calculations	74
24.	Caltrans Mainline Freeway Segments LOS and Project Impacts	76

TABLE OF CONTENTS (Contd.)

FIGURES

NO.	TITLE	PAGE
1.	Study Area and the Vicinity	7
2.	Aerial View of the Study Area	8
3.	Existing Intersection Lane Configuration	10
4.	Existing 2016 AM and PM Peak Hour Volumes	11
5.	Future 2020 Peak Hour Volumes from Related Projects	21
6.	Future 2020 Peak Hour Volumes Without TOD Projects	22
7.	TOD Specific Plan Subareas	25
8.	Regional Trip Distribution Percentage for TOD Projects	27
9.	Trip Distribution from TOD Projects	28
10.	Future 2020 Peak Hour Volumes With TOD Projects	29
11.	Future 2035 Peak Hour Volumes Without TOD Projects	35
12.	Future 2035 Peak Hour Volumes With TOD Projects	36
13.	Existing Caltrans Intersection Lane Configuration	55
14.	Caltrans Intersection Existing 2016 AM and PM Peak Hour Volumes	56
15.	Caltrans Intersection Future 2020 Peak Hour Volumes from Related Projects	59
16.	Caltrans Intersection Future 2020 Peak Hour Volumes from TOD Projects	60
17.	Caltrans Intersection Future 2020 Volumes With and Without TOD Projects	61
18.	Caltrans Intersection Future 2035 Volumes With and Without TOD Projects	64
19.	Caltrans Freeway Segments LOS, Density and Flow Rate	72

TECHNICAL APPENDIX

TRAFFIC IMPACT STUDY

CITY OF EL MONTE DOWNTOWN MAIN STREET TRANSIT-ORIENTED DEVELOPMENT SPECIFIC PLAN EL MONTE, CALIFORNIA

Preparer's Certification:

This is to certify that the above titled traffic study has been prepared under the supervision of M. Yunus Rahi, Ph.D, P.E, T.E, a Professional Civil and Traffic Engineer, registered in the State of California.

	12-12-2016	
M. Yunus Rahi, Ph.D, P.E, T.E Registration #: C-59183, TR-1726	Date	Professional Engineer's Stamp

TRAFFIC IMPACT STUDY

CITY OF EL MONTE DOWNTOWN MAIN STREET TRANSIT-ORIENTED DEVELOPMENT SPECIFIC PLAN EL MONTE, CALIFORNIA

Executive Summary:

The purpose of this traffic impact analysis is to evaluate the impacts on traffic circulation system due to the proposed creation of a Specific Plan and Master Plan for the City of El Monte's Downtown District, which includes Valley Mall (Main Street), as a transit- and pedestrian oriented, mixed-use urban village. The project site is located in the central heart of the City El Monte, and encompasses a triangular area bounded by the Metrolink railroad tracks to the north, Santa Anita Avenue to the west, and Ramona Boulevard to the south.

The proposed Transit-Oriented Development (TOD) Specific Plan and Master Plan project has been planned to provide sufficient housing, retail, commercial, entertainment, dining, and recreational uses to help eliminate existing physical, economic, and social blight in the Downtown District and the Valley Mall area.

The following key intersections have been identified as key intersections located within the project area and the vicinity to be analyzed for existing and future conditions:

1. Santa Anita Avenue and Valley Boulevard
2. Santa Anita Avenue and/Ramona Boulevard
3. Santa Anita Avenue and I-10 WB Ramps (Brockway Ave)
4. Santa Anita Avenue and I-10 EB Ramps (Asher St)
5. Tyler Avenue and Valley Boulevard
6. Tyler Avenue and Ramona Boulevard
7. Valley Boulevard and Ramona Boulevard
8. Peck Road and Valley Boulevard
9. Santa Anita Avenue and Valley Mall (Main Street)

Based on the results of this analysis, 3 of the study intersections are operating at unacceptable LOS (i.e., at LOS E or F) during the AM or PM peak hours under 2016 existing conditions. These unacceptable (or deficient) intersections are:

- Santa Anita Avenue and Valley Boulevard
- Santa Anita Avenue and I-10 EB Ramps
- Peck Road and Valley Boulevard

A list of past, present, and probable future projects identified by the City and neighboring jurisdictions has been developed to analyze the impacts of related projects in the TOD Specific Plan area. In total, these related projects consist of residential development of approximately 364 single-family, 1,392 multi-family and 128 condominium units, and commercial development of approximately 1,279,000 square feet of retail space, 96,700 square feet of office space, 883 hotel rooms, 87 assisted living units and 109,900 square feet of industrial (manufacturing and warehousing) space.

The daily and peak hour trips expected to be generated from these related projects have been estimated by using rates from Institute of Transportation Engineers' publication "Trip Generation", 9th Edition. The related projects are estimated to generate approximately 53,460 trips per average week day, 4,144 trips during the AM peak hour (1,974 trips inbound, 2,170 trips outbound) and 4,200 trips during the PM peak hour (2,108 trips inbound, 2,092 trips outbound).

There are 4 Subareas within the TOD Specific Plan. These Subareas are:

- Main Street
- Zocalo
- Station
- Monte Vista

The 4 Subareas of the TOD Specific Plan is estimated to have a potential new development of approximately 2,200 residential units (single-family, multi-family, condominiums) and approximately 500,000 square feet of commercial (retail, office, industrial) spaces. Using rates from Institute of Transportation Engineers' publication "Trip Generation", 9th Edition, it is estimated that these projects will generate a total of 21,370 trips per day (10,685 inbound and 10,685 outbound) of which 948 trips will be generated during the AM peak hour (316 inbound and 632 outbound), and 1,917 trips will be generated during the PM peak hour (1,130 inbound and 787 outbound).

The results of LOS, and V/C ratio (or ICU) analysis for the study intersections under 2020 cumulative conditions (with project as well as without project) indicate that 5 of the 9 study intersections would be expected to operate at an unacceptable LOS (i.e. LOS E or F) during either the AM or PM peak hours (or both peak hours) under 2020 cumulative traffic conditions (with project). The increase in the V/C ratio at these intersections would exceed the threshold of significant impacts.

These intersections are:

- Santa Anita Avenue and Valley Boulevard
- Santa Anita Avenue and I-10 WB Ramps
- Santa Anita Avenue and I-10 EB Ramps
- Ramona Boulevard and Valley Boulevard
- Peck Road and Valley Boulevard

Since the project will significantly impact traffic conditions at these intersections, appropriate off-site traffic mitigation measures were identified for the development of the TOD projects to reduce impacts to a level of insignificance.

Four alternatives, including a No Project alternative, have been identified to represent a reasonable range of development scenarios that could occur within the TOD Specific Plan area. These are:

- No Project Alternative
- Reduced Density Alternative
- Reduced Specific Plan Area Alternative
- Mobility Alternative

The daily and peak hour trips expected to be generated from these alternative projects have also been estimated using rates from Institute of Transportation Engineers' publication "Trip Generation", 9th Edition.

A comparative evaluation of trips generated by the Project and the alternative projects indicates that the Mobility alternative will generate the maximum number of trips (i.e., same as the Project) while the No Project alternative will generate the minimum number of trips (22% of the Project for daily and PM peak hour, 15% of the Project for AM peak hour). The Reduced Area alternative will generate slightly more trips than the No Project alternative (25% of the Project for daily and PM peak hour, 26% of the Project for AM peak hour).

Per Caltrans' requirements, state facilities within and near the project area were also analyzed using Caltrans' *Guide to Preparation of Traffic Impact Studies*, December 2002, which specifies the use of Highway Capacity Manual (HCM) methods of intersection capacity and LOS analysis for ramp intersections, as well as the HCM methods for off- and on-ramps and freeway mainline segments.

The Project's impacts at 4 Freeway Ramp intersections, located in the project study area, have been analyzed using the Synchro Software based on the 2010 Highway Capacity Manual (HCM) procedures. The following 2 ramp intersections have been determined to be significantly impacted by the project:

- Santa Anita Avenue and I-10 Westbound Ramps (Brockway Ave) – Signalized
- Santa Anita Avenue and I-10 Eastbound Ramps (Asher St) - Signalized

These two intersections were also determined to be significantly impacted by the project along with other 3 City intersections. Off-site traffic mitigation measures identified for the development of the TOD projects are adequate to reduce impacts to a level of insignificance.

A total of 5 off-ramps and 4 on-ramps facilities, as well as 8 freeway mainline segments analyzed show that project impacts to these Caltrans facilities are not significant.

TRAFFIC IMPACT STUDY

CITY OF EL MONTE DOWNTOWN MAIN STREET TRANSIT-ORIENTED DEVELOPMENT SPECIFIC PLAN EL MONTE, CALIFORNIA

Introduction:

The purpose of this traffic impact analysis is to evaluate the impacts on traffic circulation system due to the proposed creation of a Specific Plan and Master Plan for the City of El Monte's Downtown District, which includes Valley Mall (Main Street), as a transit- and pedestrian-oriented, mixed-use urban village. The project site is located in the central heart of the City El Monte, and encompasses a triangular area bounded by the Metrolink railroad tracks to the north, Santa Anita Avenue to the west, and Ramona Boulevard to the south.

The proposed Transit-Oriented District (TOD) Specific Plan and Master Plan project has been planned to provide sufficient housing, retail, commercial, entertainment, dining, and recreational uses to help eliminate existing physical, economic, and social blight in the Downtown District and the Valley Mall area.

The following are the key objectives of the study:

- Documentation of existing 2016 traffic conditions in the vicinity of the project.
- Determination of Project Opening Year (2020) traffic conditions and level of service (LOS) without and with the project.
- Determination of Project Build-out Year (2035) traffic conditions and level of service (LOS) without and with the project.
- Determination of project related impacts to the circulation system, and
- Identification of mitigation measures to reduce any significant impacts to a level of insignificance.

The report provides data regarding existing operational characteristics of traffic in the general vicinity of the project, as well as an analysis of the proposed project's impacts to these existing and anticipated future traffic conditions. The report identifies and quantifies the impacts at key intersections and recommends the most appropriate and reasonable mitigation strategies at any impacted intersections which are identified to be operating at a deficient level of service. This report investigates existing 2016 and anticipated future 2020 and 2035 build-out year traffic operating conditions. The project's traffic impacts have been analyzed and mitigation measures identified for significant impacts.

Report Methodology:

This report approaches the task of identifying and quantifying the anticipated impacts to the circulation system with a structured, "building block" methodology. The first step is to inventory and quantify existing conditions. Upon this foundation of fact, a travel forecast model is structured for the entire project area and calibrated to produce reliable output, verifiable with the existing data. With the project traffic calculated and distributed onto the study area, at the project opening year 2020 and anticipated build-out year of the project in 2035, the travel forecast model is utilized to assess the project traffic impacts at that time. The model utilizes a growth factor for traffic based upon regional guidelines, as well as the traffic anticipated to be introduced from the proposed project to produce the travel forecast and level-of-service data for the future target year.

The trip generation estimate for development projects is based on the 9th edition of Institute of Transportation Engineers (ITE)'s "Trip Generation" handbook. Research and interviews have been conducted in order to identify and characterize the most probable trip distribution patterns within the study area.

Project impacts are identified for the future year 2020 and 2035 conditions. At those intersections that are determined to be operating deficiently (i. e, at LOS D or worse) and significantly impacted by the proposed project, a mitigation measure is to be identified and applied, and a before-and-after mitigation analysis conducted.

Level of Service Criteria

Roadway operations and the relationship between capacity and traffic volumes are generally expressed in terms of levels of service (LOS). Levels of service are defined as LOS A through F. These levels recognize that, while an absolute limit exists as to the amount of traffic traveling through a given intersection (the absolute capacity), the conditions that motorists experience rapidly deteriorate as traffic approaches the absolute capacity. Under such conditions, congestion is experienced. There is generally instability in the traffic flow, which means that relatively small incidents (e.g., momentary engine stall) can cause considerable fluctuations in speeds and delays. This near-capacity situation is labeled LOS E. Beyond LOS E, capacity is exceeded, and arriving traffic will exceed the ability of the intersection to accommodate it. An upstream queue will form and continue to expand in length until the demand volume reduces.

A complete description of the meaning of level of service can be found in the Highway Research Board's Special Report 209: Highway Capacity Manual which establishes the definitions for levels of service A through F. Brief descriptions of the six levels of service, as extracted from the manual, are listed in **Table 1**.

TABLE 1
LEVEL OF SERVICE DEFINITIONS

LOS	Description
A	No approach phase is fully utilized by traffic and no vehicle waits longer than one red indication. Typically, the approach appears quite open, turns are made easily and nearly all drivers find freedom of operation.
B	This service level represents stable operation, where an occasional approach phase is fully utilized and a substantial number are approaching full use. Many drivers begin to feel restricted within platoons of vehicles.
C	This level still represents stable operating conditions. Occasionally, drivers have to wait through more than one red signal indication, and backups may develop behind turning vehicles. Most drivers feel somewhat restricted.
D	This level encompasses a zone of increasing restriction approaching instability at the intersection. Delays to approaching vehicles may be substantial during short peaks within the peak period; however, enough cycles with lower demand occur to permit periodic clearance of developing queues, thus preventing excessive backups.
E	Capacity occurs at the upper end of this service level. It represents the most vehicles that any particular intersection can accommodate. Full utilization of every signal cycle is seldom attained no matter how great the demand.
F	This level describes forced flow operations at low speeds, where volumes exceed capacity. These conditions usually result from queues of vehicles backing up from restriction downstream. Speeds are reduced substantially and stoppages may occur for short or long periods of time due to congestion. In the extreme case, both speed and volume can drop to zero.

The thresholds of level of service for unsignalized and signalized intersections are shown in **Table 2**, as follows:

TABLE 2
LEVEL OF SERVICE CRITERIA

Level of Service	Two-Way or All-Way Stop Controlled Intersection Average Delay per Vehicle (sec)	Signalized Intersection Average Delay per Vehicle (sec)
A	0 - 10	< or = 10
B	> 10 - 15	> 10 - 20
C	> 15 - 25	> 20 - 35
D	> 25 - 35	> 35 - 55
E	> 35 - 50	> 55 - 80
F	> 50	> 80 or a V/C ratio equal to or greater than 1.0

LOS D is the minimum threshold at all key intersections in the urbanized areas. The traffic study guidelines require that traffic mitigation measures be identified to provide for operations at the minimum threshold levels.

For the study area intersections, the Intersection Capacity Utilization (ICU) procedure has been utilized to determine intersection levels of service. Levels of service are presented for the entire intersection, consistent with the local and regional agency policies.

While the level of service concept and analysis methodology provides an indication of the performance of the entire intersection, the single letter grade A through F cannot describe specific operational deficiencies at intersections. Progression, queue formation, and left-turn storage are examples of the operational issues that affect the performance of an intersection, but do not factor into the strict calculation of level of service. However, it provides a volume to capacity (V/C) ratio that is more meaningful when identifying a project's impact and developing mitigation measures. Therefore, this V/C ratio information is included in describing an intersection's operational performance under various scenarios.

It should be noted that this project has a long-term implementation time line, and therefore, traffic impact analysis criteria may be changing I the near future. California Senate Bill SB 743, signed by Governor Brown, requires amendment to the CEQA Guidelines to provide an alternative to LOS for evaluating transportation impacts. Particularly within areas served by transit, those alternative criteria must promote the reduction of greenhouse gas emissions, the development of multimodal transportation networks, and a diversity of land uses.

Measurements of transportation impacts may include vehicle miles traveled (VMT), vehicle miles traveled per capita, automobile trip generation rates, or automobile trips generated. Once the CEQA Guidelines are amended to include those alternative criteria, auto delay will no longer be considered a significant impact under CEQA. Transportation impacts related to air quality, noise and safety must still be analyzed under CEQA where appropriate. SB 743 also amended congestion management law to allow cities and counties to opt out of LOS standards within certain infill areas.

Aside from changes to transportation analysis, SB 743 also included several important changes to CEQA that apply to transit oriented developments, including aesthetics and parking.

Project Description:

The proposed Specific Plan and Master Plan for El Monte's Downtown District includes Valley Mall (Main Street) as a transit- and pedestrian oriented, mixed-use urban village. The Project would be directly linked by convenient public transit (including the City's Metrolink station to the south and the El Monte Transit Center to the west). These facilities are within walking distance of the project area and provide important gateways to other destinations around the region. The Project will provide sufficient housing, retail, commercial, entertainment, dining, and recreational uses.

The Specific Plan and Master Plan Project could include a new cinema; supermarket; restaurants and cafes; improvements to the roadway network; landscaping with new plazas, water features, and seating areas; public promenades; off-street parking; improvements to utility infrastructure; links to the Metrolink platform and El Monte Transit Center; pedestrian-oriented lighting; and an innovative signage program designed for a Downtown area. A new retail and entertainment core would anchor the Downtown area, as well as draw visitors to and stimulate excitement in Downtown district. Land uses and future development projects would respond to community needs and market conditions.

Figure 1 shows the study area and the vicinity.

Figure 2 shows an aerial view of the study area.

Existing 2016 Conditions:

The following key intersections have been identified, in consultation of City staff, as key intersections located within the project area and the vicinity to be analyzed for existing and future conditions:

1. Santa Anita Avenue and Valley Boulevard
2. Santa Anita Avenue and/Ramona Boulevard
3. Santa Anita Avenue and I-10 WB Ramps (Brockway Ave)
4. Santa Anita Avenue and I-10 EB Ramps (Asher St)
5. Tyler Avenue and Valley Boulevard
6. Tyler Avenue and Ramona Boulevard
7. Valley Boulevard and Ramona Boulevard
8. Peck Road and Valley Boulevard
9. Santa Anita Avenue and Valley Mall (Main Street)

The project's existing conditions (as well as future conditions) analysis includes data collection including existing intersection traffic volumes, traffic controls and lane geometrics, parking and pedestrian facilities, a review of existing land uses, and determination of existing levels of service (LOS) at these intersections.

FIGURE 1: STUDY AREA AND THE VICINITY

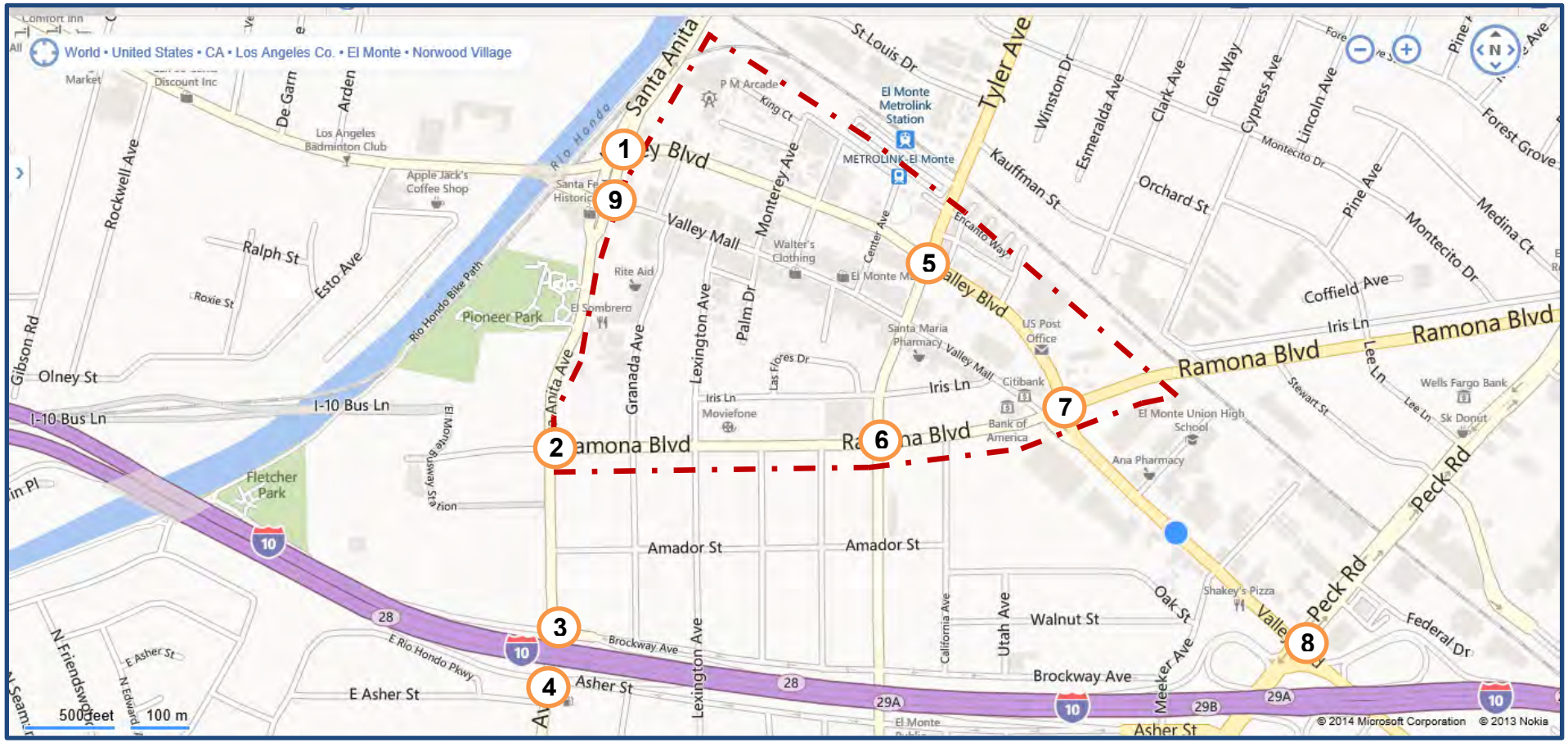

Study Intersections:

1. Santa Anita Avenue and Valley Boulevard
2. Santa Anita Avenue and/Ramona Boulevard
3. Santa Anita Avenue and I-10 WB Ramps (Brockway Ave)
4. Santa Anita Avenue and I-10 EB Ramps (Asher St)
5. Tyler Avenue and Valley Boulevard
6. Tyler Avenue and Ramona Boulevard
7. Valley Boulevard and Ramona Boulevard
8. Peck Road and Valley Boulevard
9. Santa Anita Avenue and Valley Mall (Main St)

FIGURE 2: AERIAL VIEW OF THE STUDY AREA

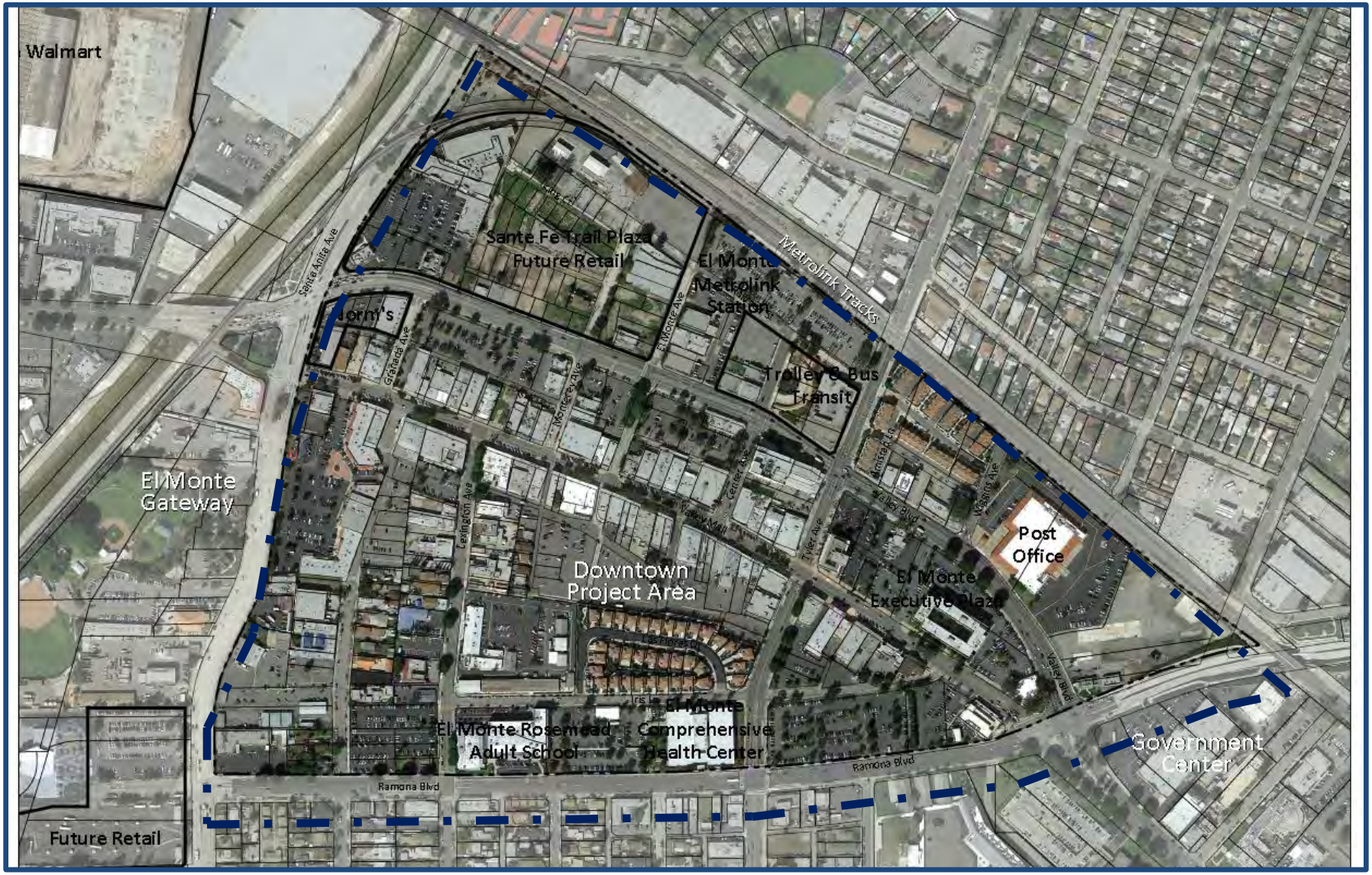

Traffic count data for these intersections were extracted from Environmental Impact Reports (EIR) prepared for the City's 2014 Walmart development project as well as 2011 General Plan Update. Counts were collected in 2012 and 2010, and therefore, the data were updated for existing 2016 traffic conditions by applying a 1% per year ambient annual growth factor consistent with Los Angeles County Congestion Management Program (CMP) maintained by the Metropolitan Transportation Authority (MTA).

Four major roadways provide regional access to the study area. Two major roadways – Santa Anita Avenue and Tyler Avenue provide north-south access, and two other major roadways – Valley Boulevard and Ramona Boulevard provide east-west access. The City's General Plan designation for Santa Anita Avenue and Valley Boulevard is Major Arterial, while Ramona Boulevard and Tyler Avenue are designated as Secondary Arterial. Traffic counts were conducted using automatic traffic counters on these four major roadways in the month of May, 2014. Roadway segment level of service (LOS) analysis was conducted using these traffic count data, roadway characteristics, lane geometry and roadway capacity for the following four roadway segments:

1. Santa Anita Avenue between Valley Boulevard and Ramona Boulevard
2. Valley Boulevard between Santa Anita Avenue and Tyler Avenue
3. Ramona Boulevard between Tyler Avenue and Valley Boulevard
4. Tyler Avenue between Valley Boulevard and Ramona Boulevard

Existing intersection lane configurations are shown on **Figure 3**.

Existing turning movement volumes for AM and PM peak hour conditions are shown on **Figure 4.**

Detailed turning movement counts as well as 24-hour daily traffic counts data are included in the Technical Appendix of this report.

Existing Traffic Conditions Level of Service Analysis

Year 2016 existing traffic conditions were evaluated using the Intersection Capacity Utilization (ICU) procedure of level of service (LOS) analysis.

Table 3 presents the existing condition intersection level of service (LOS) analysis summary. Detailed calculations relating to the study intersections are included in the Technical Appendix of this report.

Table 4 presents the existing level of service (LOS) for roadway segments.

FIGURE 3: EXISTING INTERSECTION LANE CONFIGURATION

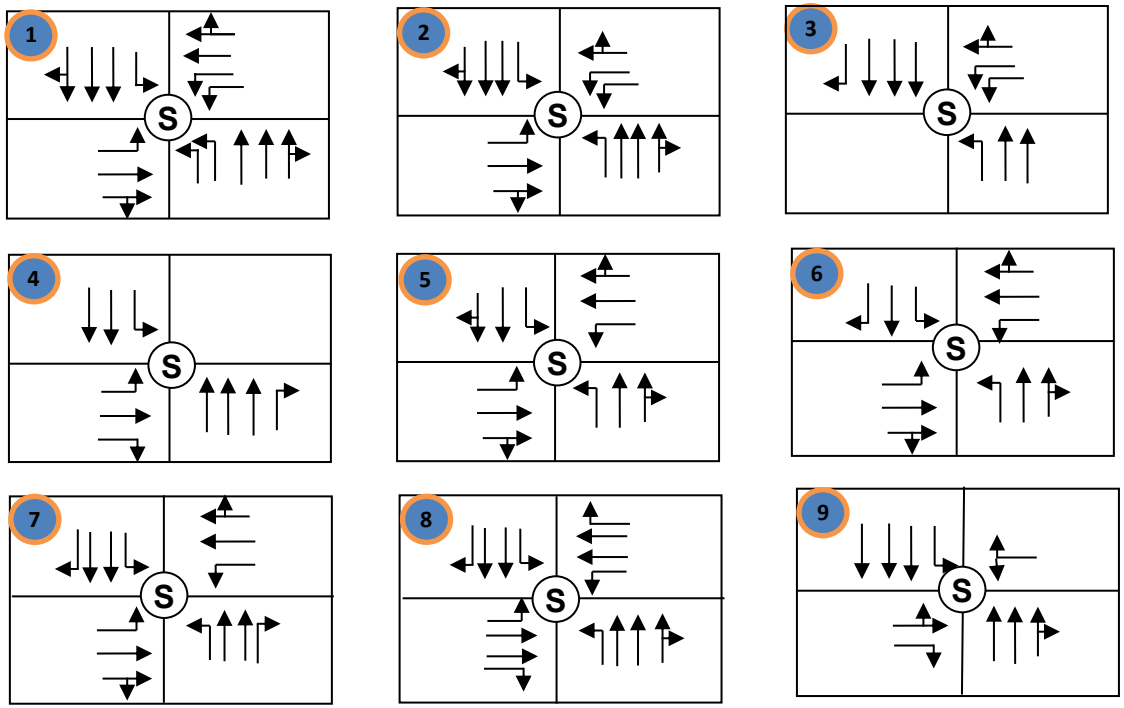

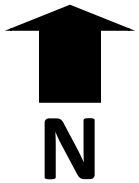

Legend:

1 = Intersection No. (S) = Signal

→ = Travel lane provided for Indicated movement

Study Intersections:

1. Santa Anita Avenue and Valley Boulevard
2. Santa Anita Avenue and/Ramona Boulevard
3. Santa Anita Avenue and I-10 WB Ramps (Brockway Ave)
4. Santa Anita Avenue and I-10 EB Ramps (Asher St)
5. Tyler Avenue and Valley Boulevard
6. Tyler Avenue and Ramona Boulevard
7. Valley Boulevard and Ramona Boulevard
8. Peck Road and Valley Boulevard
9. Santa Anita Avenue and Valley Mall (Main Street)

FIGURE 4: EXISTING 2016 AM AND PM PEAK HOUR VOLUME AT STUDY INTERSECTIONS

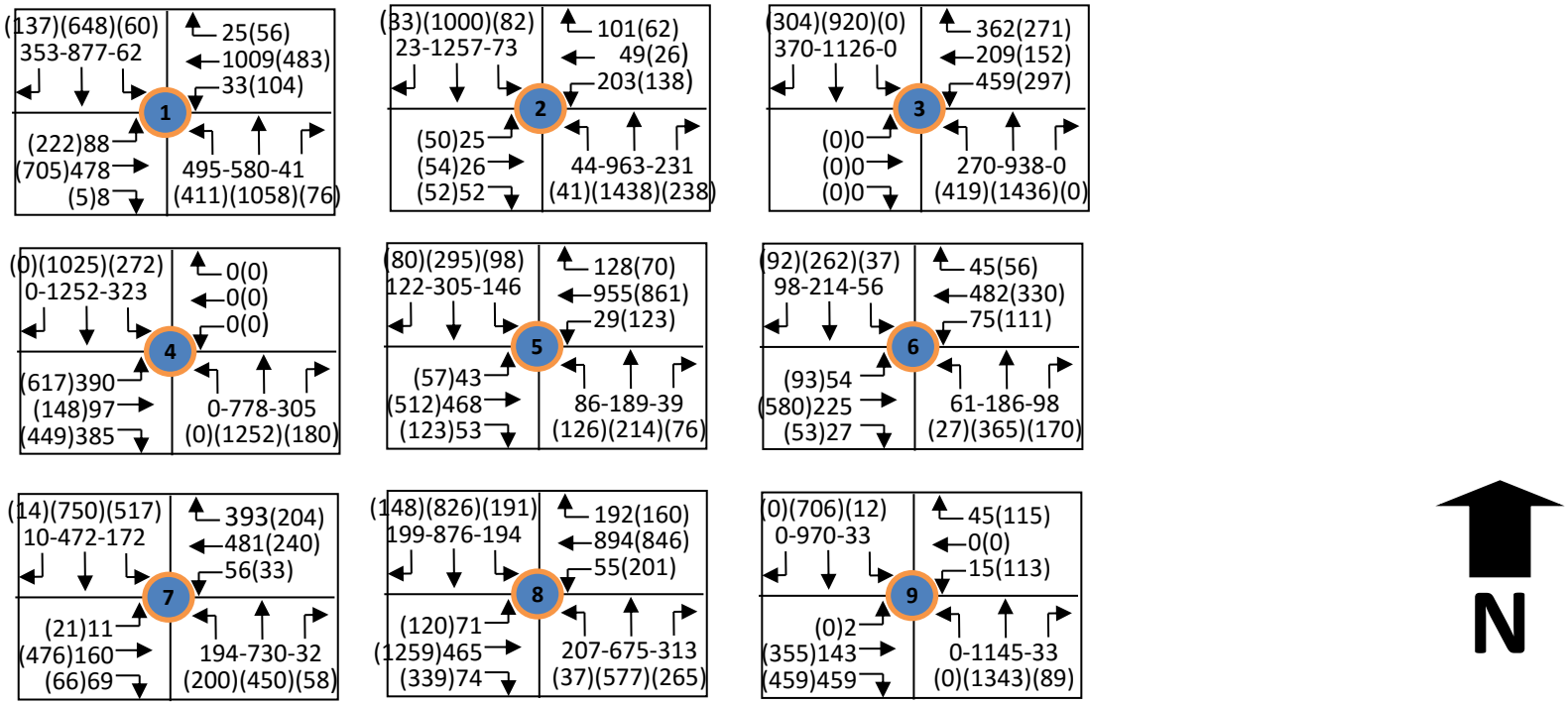

Study Intersections:

1. Santa Anita Avenue and Valley Boulevard
2. Santa Anita Avenue and/Ramona Boulevard
3. Santa Anita Avenue and I-10 WB Ramps (Brockway Ave)
4. Santa Anita Avenue and I-10 EB Ramps (Asher St)
5. Tyler Avenue and Valley Boulevard
6. Tyler Avenue and Ramona Boulevard
7. Valley Boulevard and Ramona Boulevard
8. Peck Road and Valley Boulevard
9. Santa Anita Avenue and Valley Mall (Main Street)

TABLE 3
EXISTING 2016 INTERSECTION LEVEL OF SERVICE

INTERSECTION	PEAK HOUR	EXISTING 2016 TRAFFIC CONDITIONS	
		V/C	LOS
1. Santa Anita Av/Valley Bl	AM	0.906	E
	PM	0.713	C
2. Santa Anita Av/Ramona Bl	AM	0.504	A
	PM	0.586	A
3. Santa Anita Av/I-10 WB Ramps	AM	0.860	D
	PM	0.818	D
4. Santa Anita Av/I-10 EB Ramps	AM	0.924	E
	PM	0.775	C
5. Tyler Av/Valley Bl	AM	0.652	B
	PM	0.622	B
6. Tyler Av/Ramona Bl	AM	0.470	A
	PM	0.558	A
7. Ramona Bl/Valley Bl	AM	0.716	C
	PM	0.754	C
8. Peck Rd/Valley Bl	AM	0.827	D
	PM	0.914	E
9. Santa Anita Av/Valley Mall	AM	0.653	B
	PM	0.693	B

TABLE 4
EXISTING 2016 ROADWAY SEGMENT LEVEL OF SERVICE

Roadway Type	Dir.	No. of Lanes	AM Peak Hour				PM Peak Hour				Average Daily Traffic	Weekday Both Direction			
			Vol	Cap	V/C	LOS	Vol	Cap	V/C	LOS		Vol	Cap	V/C	LOS
Santa Anita Ave between Valley Bl and Ramona Bl															
Major Arterial	NB	3	1,353	2,400	0.56	A	1,061	2,400	0.44	A	16,548	33,420	60,000	0.56	A
	SB	3	942	2,400	0.39	A	1,407	2,400	0.59	A	16,872				
Valley Bl between Santa Anita Ave and Tyler Ave															
Major Arterial	EB	2	484	1,600	0.30	A	843	1,600	0.53	A	9,033	18,891	40,000	0.47	A
	WB	2	828	1,600	0.52	A	683	1,600	0.43	A	9,858				
Ramona Bl between Tyler Ave and Valley Bl															
Secondary Arterial	EB	2	390	1,400	0.28	A	505	1,400	0.36	A	5,599	10,659	35,000	0.30	A
	WB	2	469	1,400	0.33	A	343	1,400	0.24	A	5,060				
Tyler Ave between Valley Bl and Ramona Bl															
Secondary Arterial	EB	2	279	1,400	0.20	A	573	1,400	0.41	A	5,044	9,199	35,000	0.26	A
	WB	2	363	1,400	0.26	A	346	1,400	0.25	A	4,155				

Note: Daily Capacity for Major Arterial is 60,000 veh/day (6-lane), and 40,000 veh/per day (4-lane)
Daily Capacity for 4-lane Secondary Arterial is 40,000 veh/ day
Peak hour Capacity for Major Arterial is 800 veh/hour per lane
Peak hour Capacity for Secondary Arterial is 700 veh/hour per lane
[Ref.: City of El Monte General Plan and Zoning Code Update Draft EIR, May 2011]

Based on the results of this analysis, 3 of the study intersections are operating at unacceptable LOS (i.e., at LOS E or F) during the AM or PM peak hours under 2016 existing conditions. These unacceptable (or deficient) intersections are:

- Santa Anita Avenue and Valley Boulevard
- Santa Anita Avenue and I-10 EB Ramps
- Peck Road and Valley Boulevard

All other intersections are operating at an acceptable LOS (i.e., LOS D or better). The 4 roadway segments analyzed are operating at an acceptable LOS A during peak hours and also on a weekday 24-hour basis.

Future 2020 Conditions:

Future 2020 Intersection Level of Service

The year 2020 traffic conditions were analyzed with and without the TOD projects to determine the potential traffic impacts of TOD Specific Plan on traffic circulation system in the future. The year 2016 existing traffic volumes were updated by multiplying with a traffic growth factor to develop the estimated 2020 traffic volumes. The Los Angeles County Metropolitan Transportation Authority (LACMTA) provides traffic growth factors for various areas within the Los Angeles County in its Congestion Management Program (CMP) publications. The 2010 CMP provides traffic growth factors for El Monte area as 1.013 between 2010 and 2015, 1.026 between 2010 and 2020, and 1.053 between 2010 and 2035. Using these factors, the traffic growth in El Monte is estimated to be 0.82% per year for the years between 2016 and 2020.

Related Projects

A list of past, present, and probable future projects identified by the City and neighboring jurisdictions has been developed to analyze the impacts of related projects in the TOD Specific Plan area. The list of these projects is shown in **Table 5**.

TABLE 5
LIST OF RELATED PROJECTS

Site No.	Project	Address	Status	Residential Units			Commercial SF		Other Uses		
				SF	MF	Condo	Retail	Office	Hotel Rm	Asst Liv	Indus SF
1	Walmart Superstore	4000 Arden Dr.	Approved				182,400				
2	Senior condo and retail	11605 Garvey Ave.	Incomplete			30	6,000				
3	Residential lots	4422-4436 Bannister St.	Approved	22							
4	SF Resid. Subdivision	4731 Cedar Ave.	Comments sent	2							
5	Manufactur-ing/office	12228 Chosen St.	New info					29,400			
6	SF Subdivision	4455 Cogswell Rd.	Approved	2							
7	Detached units	3708 Cypress Ave.	Approved	12							
8	Two Resid. lots	12345 Dahlia Ave.	Approved	2							
9	SF Resid. Subdivision	12417-67 Denholm Dr.	Approved	62							
10	Office building	2728 Durfee Ave.	Comment sent					1,600			
11	14.6-ac. mixed-use	9600 Flair Dr.	Approved		600		690,000		250		
12	Office building	9133 Garvey Ave.	Approved					60,000			
13	Senior mixed-use	11707 Garvey Ave.	Environ. circulated			28	5,700			87	
14	Mixed-use	11022-48 Garvey Ave.	Approved			70	2,000				
15	Mixed-use	11301-404 Garvey Ave.	Approved		114		5,400				
16	Mixed-use	3527 Santa Anita Ave.	Under construct		485		25,000				
17	Resid. subdivision	9846 Giovanne St.	Approved	2							
18	SF residential	5229 Hammill Rd.	Approved	3							
19	SF residential	5232 Hammill Rd.	Incomplete	3							
20	2 Industrial buildings	10620 Hickson St.	Hearing								65,000
21	SF Residential	11830-842 Lambert	Comment	6							
22	SF Residential	11511 Lower Azusa	Incomplete	2							
23	SF Residential	12217 Magnolia St.	Approved	3							
24	SF Residential	2711 Meeker Ave.	Comments sent	2							

TABLE 5
LIST OF RELATED PROJECTS (Cont.)

Site No.	Project	Address	Status	Residential Units			Commercial SF		Other Uses		
				SF	MF	Condo	Retail	Office	Hotel Rm	Asst Liv	Indus SF
25	Santa Fe Trail retail center	NEC Valley/ Santa Anita	Under construct				115,000				
26	MF Residential	4610 Peck Rd.	Under construct		23						
27	MF Affordable	4704-4715 Peck Rd.	Approved		49						
28	Residential	3454 Tyler Ave.	Pipeline	32							
29	SF Residential	12045 Ranchito St	Approved	3							
30	Commercial building	3268 Rosemead	Hearing				12,100				
31	Residential complex	4127-4143 Rowland	Hearing	72							
32	Commercial/ Industrial	4213 T C Blvd	Plan Check				502,000				
33	Office/Industrial	4301 T C Blvd .	Incomplete					5,700			
34	Industrial	4304 T C Blvd	Approved								24,900
35	Hotel	9920 Valley Blvd.	Under construct						133		
36	Modify exist warehouse	10525 Valley Blvd.	Approved								10,000
37	Restaurant	10303 Valley Blvd.	Pipeline				7,600				
38	Hotel/ commercial	12300 Valley Blvd.	Comment				6,000		50		
39	Mixed-use	11640-770 Valley Blvd.	Environ. circulated	76			30,000				
40	Residential (PUD)	11712 Lansdale St	Under construct	4							
41	Residential subdivision	2231 Parkway Dr	Under construct	9							
42	Commercial with parking	9235 Whitmore	Plan Check				60,000				
43	MF Residential	11127 Ramona	Approved		66						
44	SF Residential subdivision	2808-2810 Meeker Av	Incomplete	1							
45	Residential	11613 Rio Hondo Pk	Incomplete	5							
46	Mixed-use	11714 Garvey Ave	New case	21			1,800				
47	SF Residential (PUD)	12159 Cherrylee	Comments sent	6							
48	Mixed-use	3937 Peck Rd.	New Info submitted	5			1,000				

TABLE 5
LIST OF RELATED PROJECTS (Cont.)

Site No.	Project	Address	Status	Residential Units			Commercial SF		Other Uses		
				SF	MF	Condo	Retail	Office	Hotel Rm	Asst Liv	Indus SF
49	Commercial/ Hotel	9550 Flair Dr.	New case				18,000		250		
50	SF Residential	2857 Parkway Dr	Approved	2							
51	MF Afford. housing	4102-4165 Baldwin	Approved		55						
52	Warehouse addition	4456 Baldwin	Comment								10,000
53	Residential subdivision	2709 Cogswell	Comment	4							
54	Commercial with parking	9933 Valley Blvd.	New Case				17,200				
55	Commercial with Hotel	3335 Santa Anita Ave.	New Case				100,000		200		
56	Residential	10815 Brockway	New Case	2							
57	Auto Service	3534 N. Peck Rd.	Approved				NA				
58	Commercial	10425 Garvey Ave	New Case				NA				
59	Commercial (Starbucks)	10613 Garvey Ave	New Case				900				
	Total			**364 Units**	**1,392 Units**	**128 Units**	**1,279,000 SF**	**96,700 SF**	**883 Rooms**	**87 Units**	**109,900 SF**

Table 5 shows that the related projects consist of residential development of approximately 364 single-family, 1,392 multi-family and 128 condominium units, and commercial development of approximately 1,279,000 square feet of retail space, 96,700 square feet of office space, 883 hotel rooms, 87 assisted living units and 109,900 square feet of industrial (manufacturing and warehousing) space. Out of 1,279,000 square feet of retail spaces, 606,600 square feet space have been assumed to be developed as specialty retail centers, and one of the projects with 182,400 square feet (Related Project No.1: Walmart Superstore) have been considered as superstore and another project with 690,000 square feet (Related Project No. 11: 9600 Flair Drive) have been considered a shopping Center for trip generation calculations.

The daily and peak hour trips expected to be generated from these related projects have been estimated by using rates from Institute of Transportation Engineers' publication "Trip Generation", 9th Edition. **Table 6** shows trips generation estimates from these related projects. As the table shows, the related projects are estimated to generate approximately 53,460 trips per average week day, 4,144 trips during the AM peak hour (1,974 trips inbound, 2,170 trips outbound) and 4,200 trips during the PM peak hour (2,108 trips inbound, 2,092 trips outbound).

The AM and PM peak hour trips from related projects were distributed to the study intersections using regional percentages of trip distribution. **Figure 5** shows trips distributed from related projects at the study intersections.

The trips from related projects were added to the ambient traffic volumes to develop 2020 pre-project traffic conditions at the study intersection. The future 2020 traffic volumes with ambient traffic growth and related projects at the study intersections are shown in **Figure 6**.

Level of service analysis was conducted for the 9 key intersections with projected future traffic volumes without TOD projects. The results are shown in **Table 7**.

The results indicate that 4 of the 9 study intersections are expected to operate at an unacceptable level of service (i.e., LOS E or worse) during either AM or PM or both peak hours. These intersections are:

- Santa Anita Avenue and Valley Boulevard
- Santa Anita Avenue and I-10 WB Ramps
- Santa Anita Avenue and I-10 EB Ramps
- Peck Road and Valley Boulevard

TABLE 6
TRIP GENERATION BY RELATED PROJECTS

ITE Land Use Code	Land Use	QUANTITY	UNIT	Trip Generation Rates							Estimated Trip Generation						
				DAILY	AM TOTAL	AM IN	AM OUT	PM TOTAL	PM IN	PM OUT	DAILY	AM TOTAL	AM IN	AM OUT	PM TOTAL	PM IN	PM OUT
210	Single-Family Detached	364	DU	9.52	0.75	25%	75%	1.01	63%	37%	3,465	273	68	205	368	232	136
220	Multi-Family Apartment	1,392	DU	6.65	0.51	20%	80%	0.62	65%	35%	9,257	710	142	568	863	561	302
230	Res Condo (LA County)	128	DU	8.00	0.44	17%	83%	0.51	67%	33%	1,024	56	10	47	65	44	22
814	Commercial Retail	606.600	KSF	44.34	6.84	48%	52%	2.71	44%	56%	26,897	4,149	1,992	2,158	1,644	723	921
813	Superstore (Walmart)	182.500	KSF	50.75	1.85	56%	44%	4.35	49%	51%	9,262	338	190	148	794	389	405
820	Shop Center (Flair Drive)	690.000	KSF	42.94	1.00	61%	39%	3.73	49%	51%	29,629	690	421	269	2,574	1,261	1,313
710	Commercial Office	96.700	KSF	11.03	1.56	88%	12%	1.49	17%	83%	1,067	151	133	18	144	24	120
310	Hotel	883	Room	8.92	0.56	61%	39%	0.56	53%	47%	7,876	494	302	193	494	262	232
254	Assisted Living	87	Bed	2.66	0.14	65%	35%	0.22	44%	56%	231	12	8	4	19	8	11
150	Warehousing	109.900	KSF	3.56	0.30	79%	21%	0.32	25%	75%	391	33	26	7	35	9	26
Total											89,099	6,906	3,290	3,616	7,000	3,513	3,487
Internal Capture (20%)											-17,820	-1,381	-658	-723	-1,400	-703	-697
Transit Credit (20%)											-17,820	-1,381	-658	-723	-1,400	-703	-697
Net Total											53,460	4,144	1,974	2,170	4,200	2,108	2,092

FIGURE 5: FUTURE 2020 PEAK HOUR VOLUME FROM RELATED PROJECTS AT STUDY INTERSECTIONS

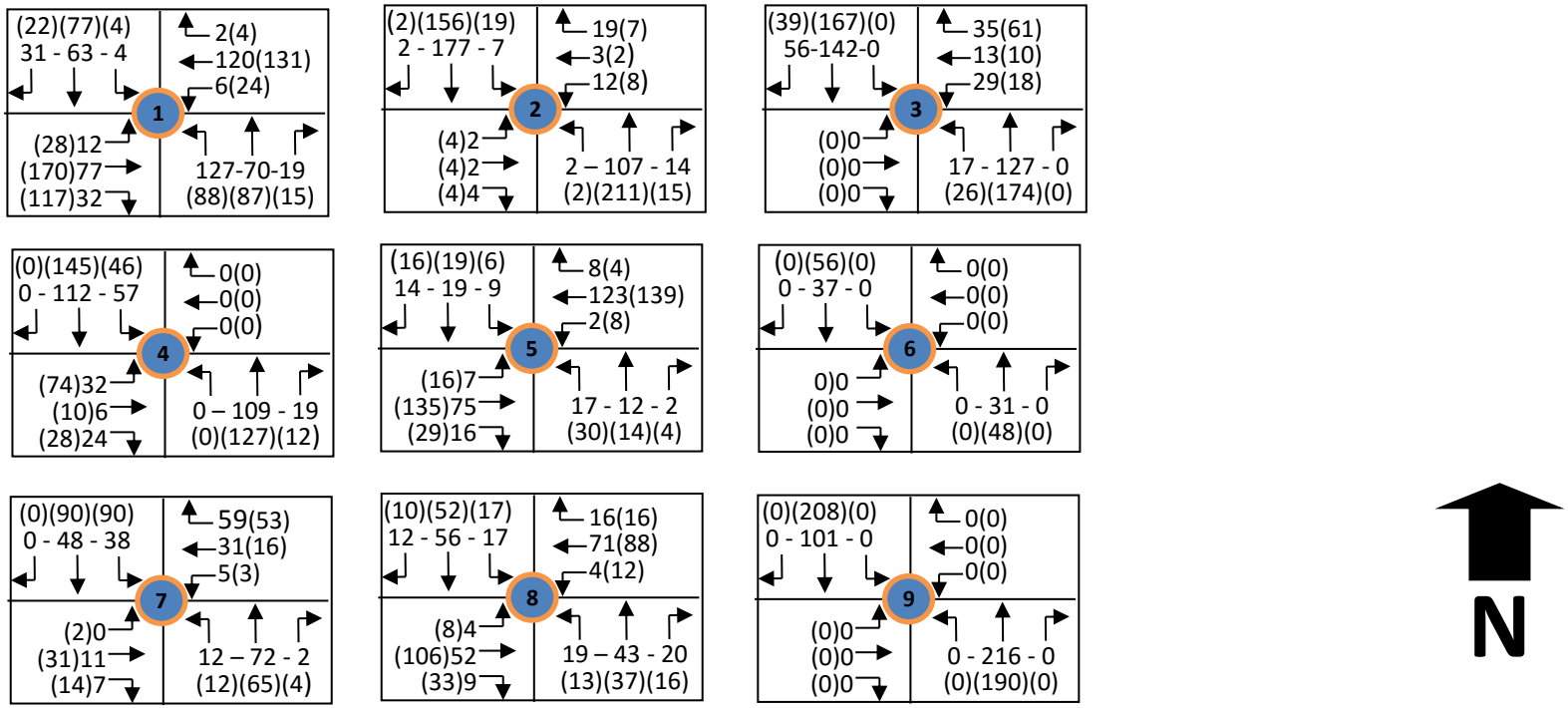

Legend:

1 = Intersection No.

XX(XX) → = AM(PM) Volume in Indicated Direction

Study Intersections:

1. Santa Anita Avenue and Valley Boulevard
2. Santa Anita Avenue and/Ramona Boulevard
3. Santa Anita Avenue and I-10 WB Ramps (Brockway Ave)
4. Santa Anita Avenue and I-10 EB Ramps (Asher St)
5. Tyler Avenue and Valley Boulevard
6. Tyler Avenue and Ramona Boulevard
7. Valley Boulevard and Ramona Boulevard
8. Peck Road and Valley Boulevard
9. Santa Anita Avenue and Valley Mall (Main Street)

FIGURE 6: FUTURE 2020 PEAK HOUR VOLUME WITHOUT TOD PROJECTS AT STUDY INTERSECTIONS

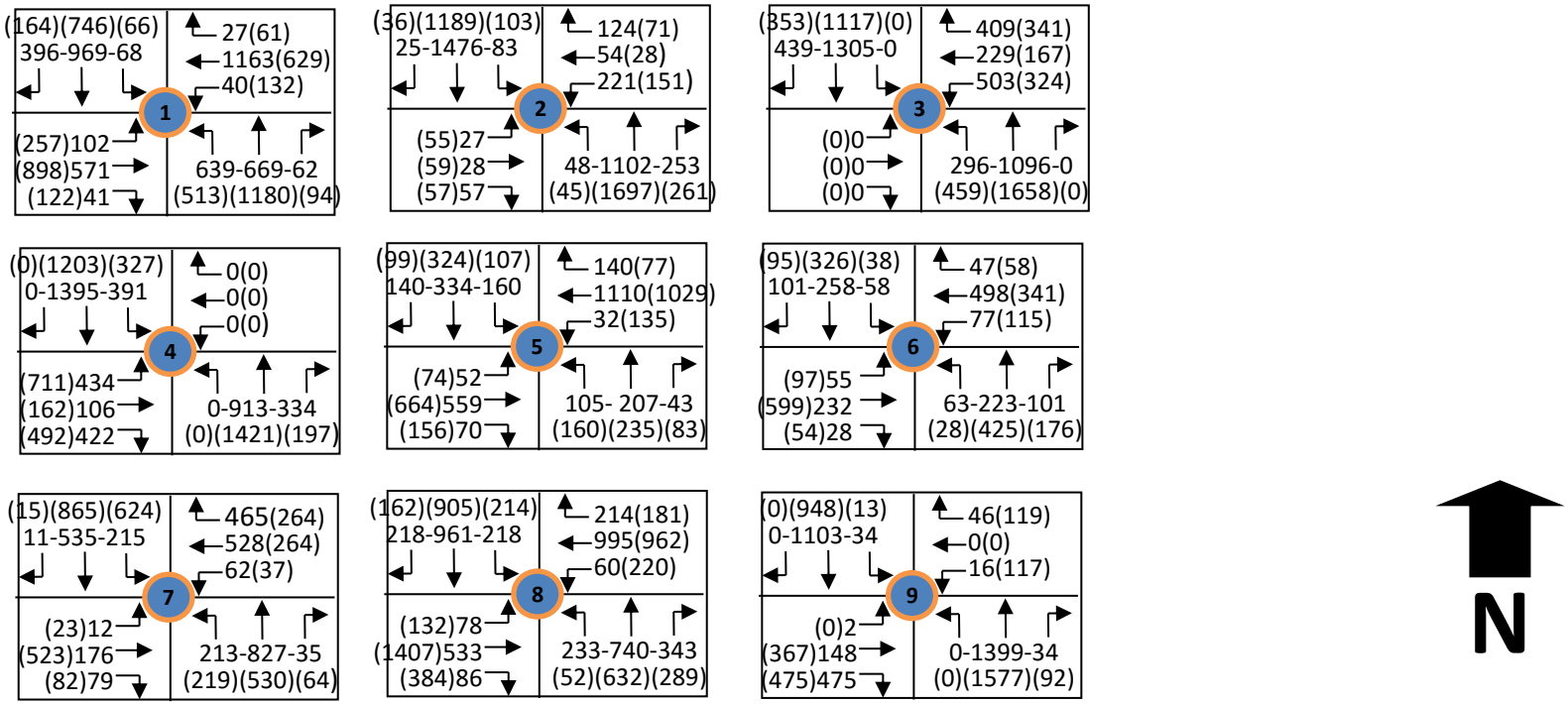

Legend:

1 = Intersection No.

XX(XX) → = AM(PM) Volume in Indicated Direction

Study Intersections:

1. Santa Anita Avenue and Valley Boulevard
2. Santa Anita Avenue and/Ramona Boulevard
3. Santa Anita Avenue and I-10 WB Ramps (Brockway Ave)
4. Santa Anita Avenue and I-10 EB Ramps (Asher St)
5. Tyler Avenue and Valley Boulevard
6. Tyler Avenue and Ramona Boulevard
7. Valley Boulevard and Ramona Boulevard
8. Peck Road and Valley Boulevard
9. Santa Anita Avenue and Valley Mall (Main Street)

TABLE 7
FUTURE 2020 PRE-PROJECT INTERSECTION LEVEL OF SERVICE

INTERSECTION	PEAK HOUR	FUTURE 2020 PRE-PROJECT TRAFFIC CONDITIONS	
		V/C	LOS
1. Santa Anita Av/Valley Bl	AM	1.042	F
	PM	0.844	D
2. Santa Anita Av/Ramona Bl	AM	0.571	A
	PM	0.669	B
3. Santa Anita Av/I-10 WB Ramps	AM	0.958	E
	PM	0.937	E
4. Santa Anita Av/I-10 EB Ramps	AM	1.026	F
	PM	0.866	D
5. Tyler Av/Valley Bl	AM	0.737	C
	PM	0.724	C
6. Tyler Av/Ramona Bl	AM	0.506	A
	PM	0.597	A
7. Ramona Bl/Valley Bl	AM	0.811	D
	PM	0.868	D
8. Peck Rd/Valley Bl	AM	0.905	E
	PM	1.003	E
9. Santa Anita Av/Valley Mall	AM	0.716	C
	PM	0.752	C

TOD Specific Plan Projects:

There are 4 Subareas within the TOD Specific Plan. These Subareas are described as follows:

Main Street. This 19-acre area is the centerpiece of the TOD Specific Plan Area and gets its name from the original street name from the period 1902 to 1935.

Zocalo. This 16-acre area is intended to be the cornerstone of the TOD Specific Plan Area. It will be a future public square and gathering space for the City of El Monte.

Station. This 20-acre area gets its name from the proximity to key stations including the Metrolink Station to the north and the El Monte Bus Station to the west.

Monte Vista. This 41-acre area consists of the southern and northern portions of the TOD Specific Plan Area and gets its name from derivations of the Spanish word "El Monte" and references in the City's history with treasured views of the San Gabriel Mountains.

The locations and boundaries of these Subareas are shown in **Figure 7.**

The 4 Subareas of the TOD Specific Plan is estimated to have a potential new development of approximately 2,200 residential units (single-family, multi-family, condominiums) and approximately 500,000 square feet of commercial (retail, office, industrial) spaces.

Table 8 shows estimated trip generation from all TOD Projects within the TOD Specific Plan Subareas. The estimates are based on trip generation rates and guidelines provided in Institute of Transportation Engineers (ITE) publication "Trip Generation", 9th edition. It is estimated that these projects will generate a total of 21,370 trips per day (10,685 inbound and 10,685 outbound) of which 948 trips will be generated during the AM peak hour (316 inbound and 632 outbound), and 1,917 trips will be generated during the PM peak hour (1,130 inbound and 787 outbound).

Figure 8 shows regional trip distribution percentages of new trips from the 4 Subareas of projects. The distribution percentages are based on existing traffic characteristics in the region, location of residential and commercial land uses, and employment and other activity centers in the vicinity.

Figure 9 shows distributed traffic volumes from the TOD Projects at the study intersections. The Technical Appendix contains a spreadsheet showing details of calculations for projected traffic volumes at the study intersections from these TOD Projects.

The future 2020 cumulative traffic volumes with ambient traffic growth plus related projects and traffic from TOD projects at the study intersections are shown in **Figure 10**.

FIGURE 7: TOD SPECIFIC PLAN SUBAREAS

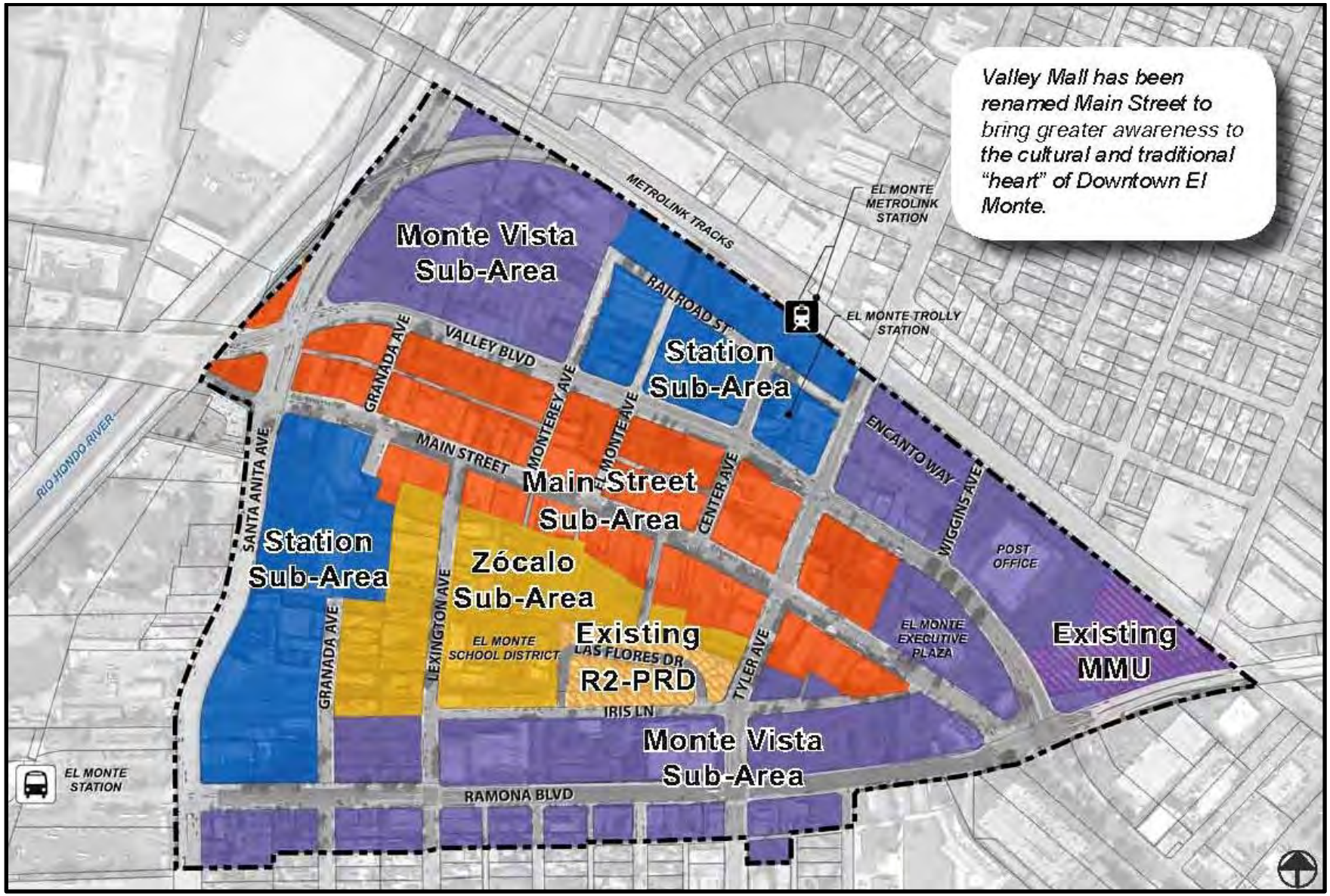

TABLE 8
TRIP GENERATION BY TOD PROJECTS

ITE Land Use Code	Land Use	Quantity	Unit	Trip Generation Rates							Estimated Trip Generation						
				Daily	AM Total	AM In	AM Out	PM Total	PM In	PM Out	Daily	AM Total	AM In	AM Out	PM Total	PM In	PM Out
Project: 2,200 DU Residential Units, 500,000 SF Commercial Floor Square Feet																	
220	Residential Multi-Family[1]	2,200	DU	6.65	0.51	20%	80%	0.62	65%	35%	14,630	1,122	224	898	1,364	887	477
820	Commercial (65%) Retail[2]	325.000	KSF	42.94	1.00	61%	39%	3.73	49%	51%	13,956	325	198	127	1,212	594	618
	Less Pass-by Trips (20%)										-2,791	-65	-40	-25	-242	-119	-124
931	Commercial (20%) Restaurant[3]	100.000	KSF	89.95	0.81	50%	50%	7.49	67%	33%	8,995	81	41	41	749	502	247
710	Commercial (15%) Office[4]	75.000	KSF	11.03	1.56	88%	12%	1.49	17%	83%	827	117	103	14	112	19	93
Total											35,617	1,580	526	1,054	3,195	1,883	1,312
Internal Capture (20%)											-7,123	-316	-105	-211	-639	-377	-262
Transit Credit (20%)											-7,123	-316	-105	-211	-639	-377	-262
Net Total											21,370	948	316	632	1,917	1,130	787

Notes:

1 Multi-Family Apartments assumed
2 Shopping Centers assumed
3 Quality Restaurants assumed
4 General Offices assumed

FIGURE 8: REGIONALTRIP DISTRIBUTION PERCENTAGES

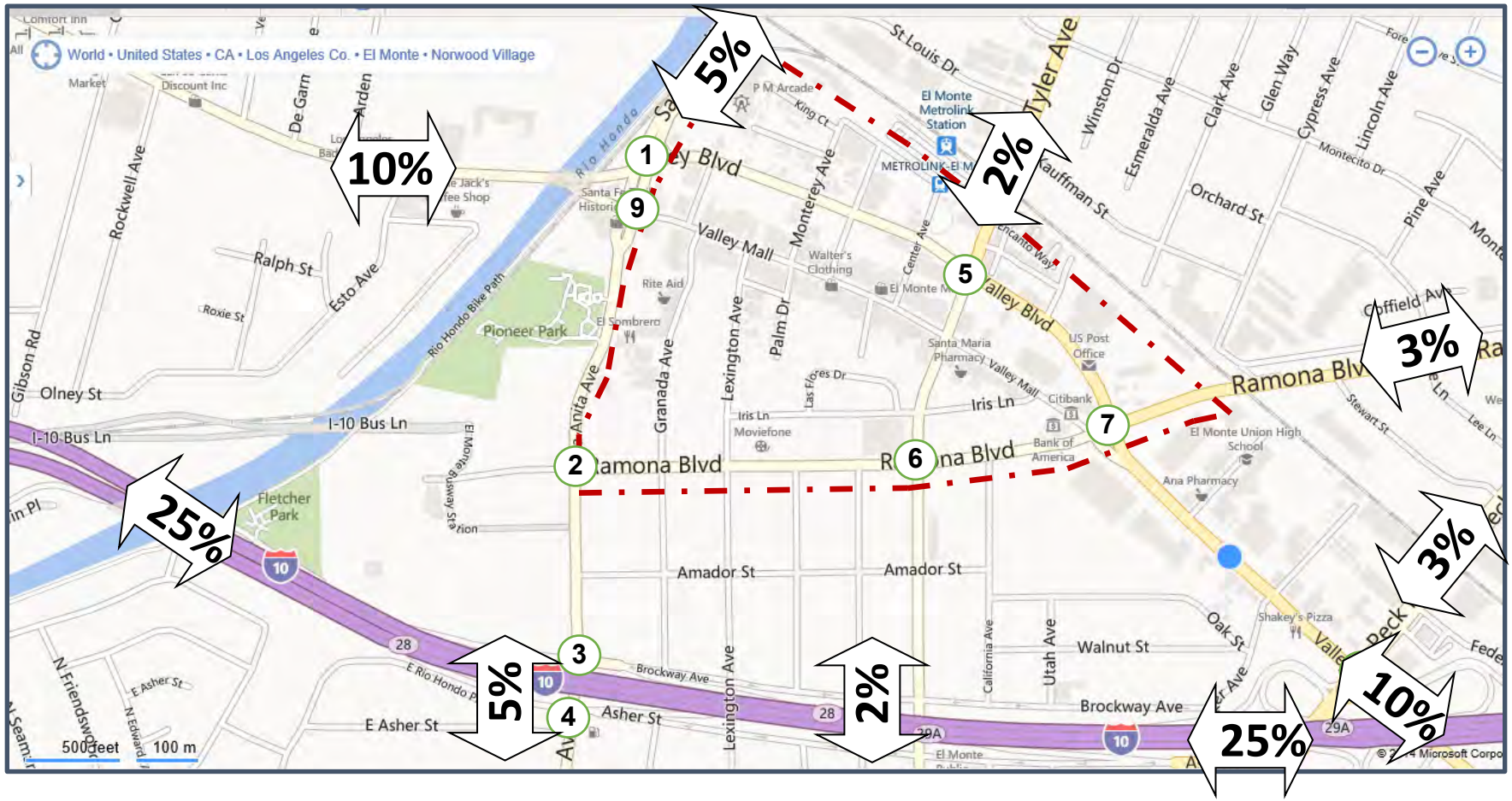

LEGEND:

= % of trips in indicated direction

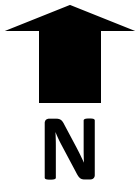

FIGURE 9: FUTURE 2020 PEAK HOUR VOLUME FROM TOD PROJECTS AT STUDY INTERSECTIONS

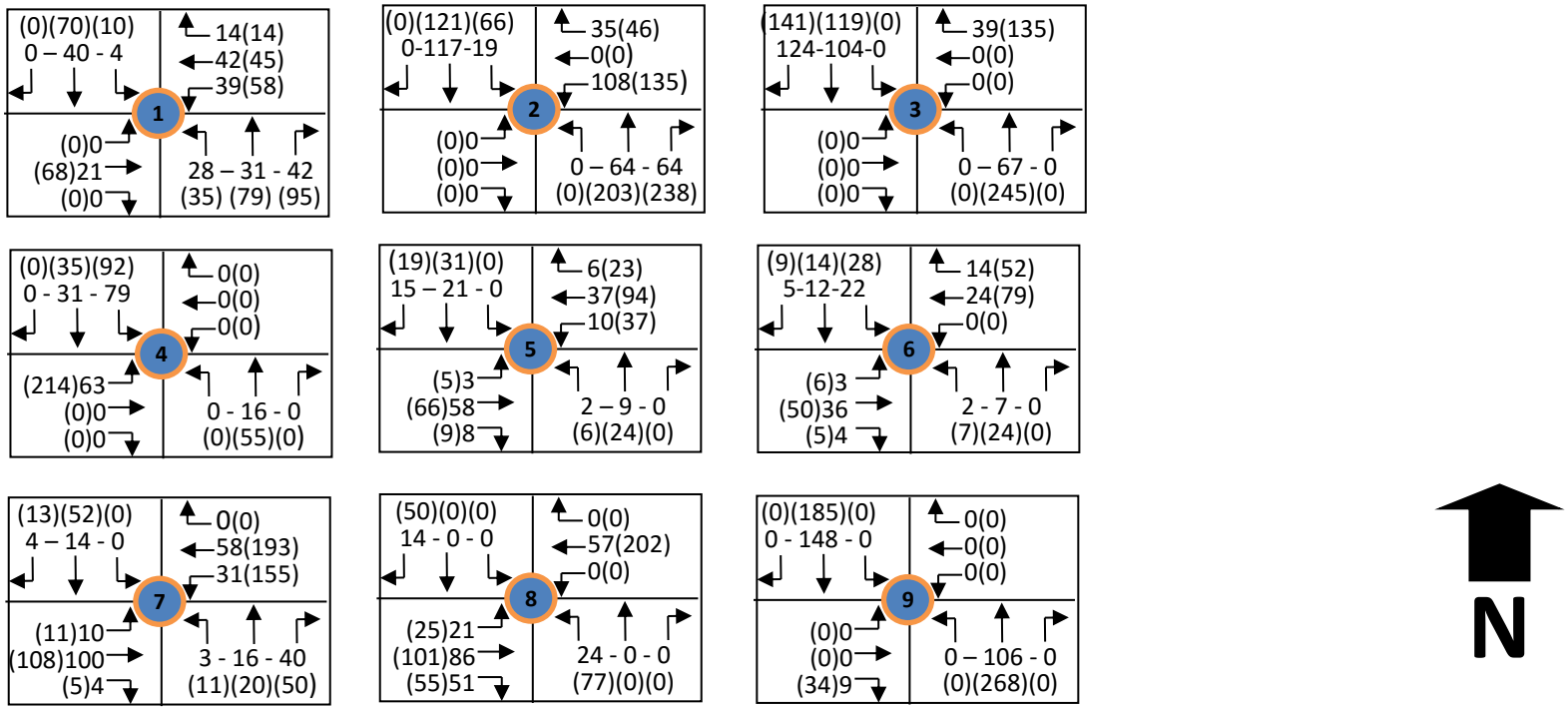

Legend:

1 = Intersection No.

XX(XX) → = AM(PM) Volume in Indicated Direction

Study Intersections:

1. Santa Anita Avenue and Valley Boulevard
2. Santa Anita Avenue and/Ramona Boulevard
3. Santa Anita Avenue and I-10 WB Ramps (Brockway Ave)
4. Santa Anita Avenue and I-10 EB Ramps (Asher St)
5. Tyler Avenue and Valley Boulevard
6. Tyler Avenue and Ramona Boulevard
7. Valley Boulevard and Ramona Boulevard
8. Peck Road and Valley Boulevard
9. Santa Anita Avenue and Valley Mall (Main Street)

FIGURE 10: 2020 PEAK HOUR CUMULATIVE VOLUME WITH TOD PROJECTS AT STUDY INTERSECTIONS

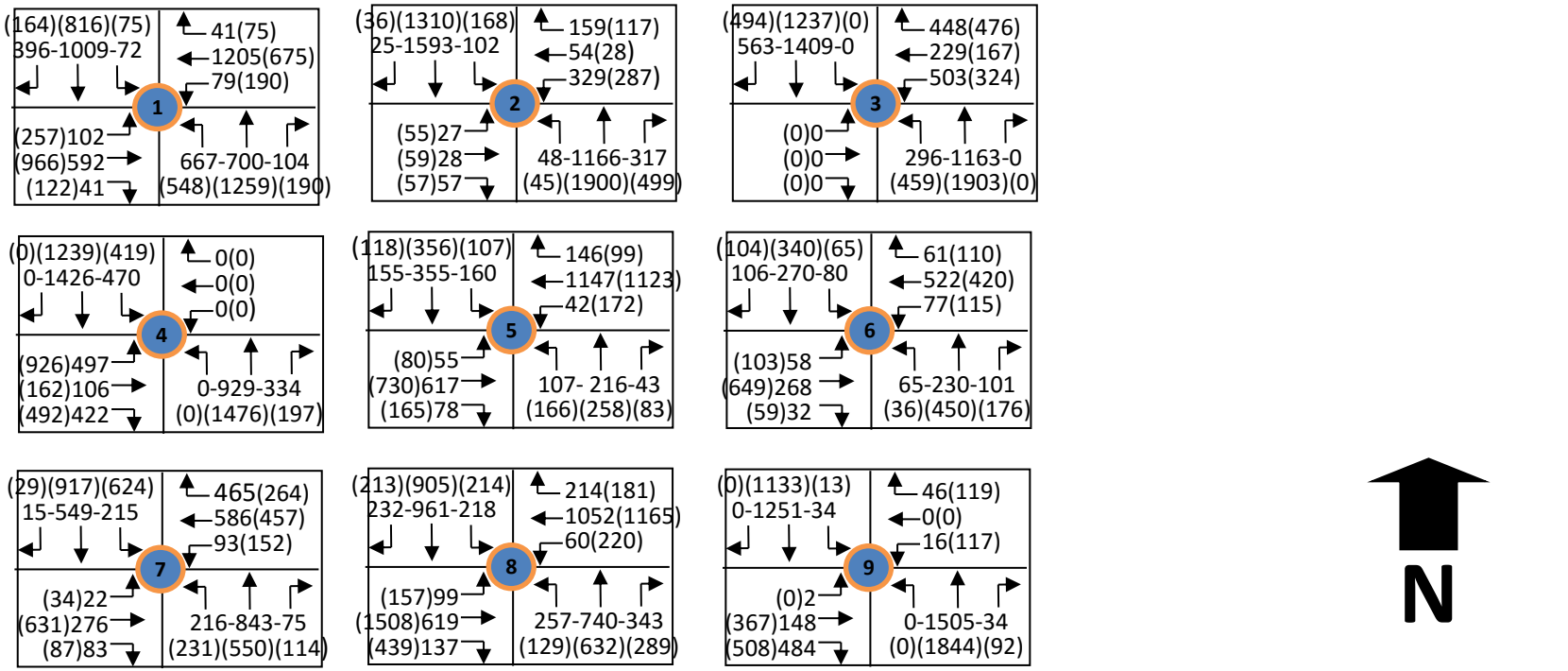

Study Intersections:

1. Santa Anita Avenue and Valley Boulevard
2. Santa Anita Avenue and/Ramona Boulevard
3. Santa Anita Avenue and I-10 WB Ramps (Brockway Ave)
4. Santa Anita Avenue and I-10 EB Ramps (Asher St)
5. Tyler Avenue and Valley Boulevard
6. Tyler Avenue and Ramona Boulevard
7. Valley Boulevard and Ramona Boulevard
8. Peck Road and Valley Boulevard
9. Santa Anita Avenue and Valley Mall (Main Street)

Level of service analysis was conducted for the 9 key intersections with projected future 2020 traffic volumes with TOD projects. The results are shown in **Table 9**.

The results indicate that 5 of the 9 study intersections are expected to operate at an unacceptable level of service (i.e., LOS E or worse) during either AM or PM or both peak hours. These intersections are:

- Santa Anita Avenue and Valley Boulevard
- Santa Anita Avenue and I-10 WB Ramps
- Santa Anita Avenue and I-10 EB Ramps
- Ramona Boulevard and Valley Boulevard
- Peck Road and Valley Boulevard

TABLE 9
FUTURE 2020 INTERSECTION LEVEL OF SERVICE WITH TOD SPECIFIC PLANS

INTERSECTION	PEAK HOUR	FUTURE 2020 TRAFFIC VOLUME W/ AMBIENT GROWTH + RELATED PROJECTS AND PROJECT	
		V/C	LOS
1. Santa Anita Av/Valley Bl	AM	1.078	F
	PM	0.900	D
2. Santa Anita Av/Ramona Bl	AM	0.623	B
	PM	0.841	D
3. Santa Anita Av/I-10 WB Ramps	AM	1.060	F
	PM	1.098	F
4. Santa Anita Av/I-10 EB Ramps	AM	1.075	F
	PM	1.011	F
5. Tyler Av/Valley Bl	AM	0.765	C
	PM	0.783	C
6. Tyler Av/Ramona Bl	AM	0.528	A
	PM	0.630	B
7. Ramona Bl/Valley Bl	AM	0.840	D
	PM	0.981	E
8. Peck Rd/Valley Bl	AM	0.951	E
	PM	1.072	F
9. Peck Rd/Valley Bl	AM	0.744	C
	PM	0.829	D

Project Impacts:

A project's traffic impact on the circulation system is determined by comparing the level of service (LOS) and V/C ratios at key intersections under the future pre-project conditions and future post-project conditions. A LOS level D or better is acceptable for urban area intersections. A level of service worse than D (i.e., LOS E or F) is unacceptable.

The LOS, V/C ratio (or ICU) for the study intersections under 2020 cumulative conditions (with project as well as without project) are summarized in **Table 10**. As the results indicate, 5 of the 9 study intersections are expected to operate at an unacceptable LOS (i.e. LOS E or F) during either the AM or PM peak hours (or both peak hours) under 2020 cumulative traffic conditions (with project). The increase in the V/C ratio at these intersections would exceed the threshold of significant impacts.

These intersections are:

- Santa Anita Avenue and Valley Boulevard
- Santa Anita Avenue and I-10 WB Ramps
- Santa Anita Avenue and I-10 EB Ramps
- Ramona Boulevard and Valley Boulevard
- Peck Road and Valley Boulevard

Since the project will significantly impact traffic conditions at these intersections, appropriate off-site traffic mitigation measures will be necessary for the development of the TOD projects to reduce impacts to a level of insignificance.

TABLE 10
FUTURE 2020 INTERSECTION LOS WITH AND WITHOUT TOD PROJECTS

INTERSECTION	PEAK HOUR	FUTURE 2020 TRAFFIC CONDITIONS				+/- V/C by TOD Projects
		WITHOUT TOD		WITH TOD		
		V/C	LOS	V/C	LOS	
1. Santa Anita Av/Valley Bl	AM	1.042	F	1.078	F	***0.033***
	PM	0.844	D	0.900	D	0.056
2. Santa Anita Av/Ramona Bl	AM	0.571	A	0.623	B	0.052
	PM	0.669	B	0.841	D	0.172
3. Santa Anita Av/I-10 WB Ramps	AM	0.958	E	1.060	F	***0.102***
	PM	0.937	E	1.098	F	***0.161***
4. Santa Anita Av/I-10 EB Ramps	AM	1.026	F	1.075	F	***0.049***
	PM	0.866	D	1.011	F	***0.145***
5. Tyler Av/Valley Bl	AM	0.737	C	0.765	C	0.028
	PM	0.724	C	0.783	C	0.059
6. Tyler Av/Ramona Bl	AM	0.506	A	0.528	A	0.022
	PM	0.597	A	0.630	B	0.033
7. Ramona Bl/Valley Bl	AM	0.811	D	0.840	D	0.029
	PM	0.868	D	0.981	E	***0.113***
8. Peck Rd/Valley Bl	AM	0.905	E	0.951	E	***0.046***
	PM	1.003	E	1.072	F	***0.069***
9. Santa Anita Av/Valley Mall	AM	0.716	C	0.744	C	0.028
	PM	0.752	C	0.829	D	0.077

Note: *Italic* and **Bold** fonts indicate significant impact due to TOD projects

Future 2035 Conditions:

The year 2035 traffic conditions were analyzed with and without the TOD projects to determine the potential traffic impacts of TOD Specific Plan on traffic circulation system at Build-out. The year 2020 ambient traffic volumes (without related projects) were updated by multiplying with a traffic growth factor to develop the estimated 2035 traffic volumes with projected growth. The Los Angeles County Metropolitan Transportation Authority (LACMTA) provides traffic growth factors for various areas within the Los Angeles County in its Congestion Management Program (CMP) publications. The 2010 CMP provides traffic growth factors for El Monte area as 1.013 between 2010 and 2015, 1.026 between 2010 and 2020, and 1.053 between 2010 and 2035. Using these factors, the traffic growth in El Monte is estimated to be 0.52% per year for the years between 2020 and 2035.

For trip distribution purposes, the trips estimated to be generated by the related projects have been added to 2035 projected volumes. The results provided traffic volumes at each study intersection under 2035 cumulative traffic scenario without TOD projects. The traffic volumes to be generated by TOD Projects were added to these volumes to develop 2035 cumulative traffic volumes with TOD projects.

The future 2035 cumulative traffic volumes without and with traffic from TOD projects at the study intersections are shown in **Figure 11** and **Figure 12**.

In addition to future 2035 cumulative traffic scenarios, an ambient (not including related projects) 2035 scenario with TOD projects was analyzed to determine project impacts under ambient conditions. The estimated traffic volumes from TOD projects were added to ambient traffic volumes (i. e., existing traffic volumes updated with 0.52% per year growth between 2020 and 2035) to develop traffic volumes for this scenario.

Future 2035 Intersection Levels of Service

Level of service analysis was conducted for the 9 key intersections for projected future 2035 traffic volumes with and without TOD projects. The results are shown in **Table 11**. As the results indicate, 5 of the 9 study intersections are expected to operate at an unacceptable LOS (i.e. LOS E or F) during either the AM or PM peak hours (or both peak hours) under 2035 cumulative traffic conditions (with project). The increase in the V/C ratio at these intersections would exceed the threshold of significant impacts.

These intersections are:

- Santa Anita Avenue and Valley Boulevard
- Santa Anita Avenue and I-10 WB Ramps
- Santa Anita Avenue and I-10 EB Ramps
- Ramona Boulevard and Valley Boulevard
- Peck Road and Valley Boulevard

FIGURE 11: FUTURE 2035 PEAK HOUR VOLUME WITHOUT TOD PROJECTS AT STUDY INTERSECTIONS

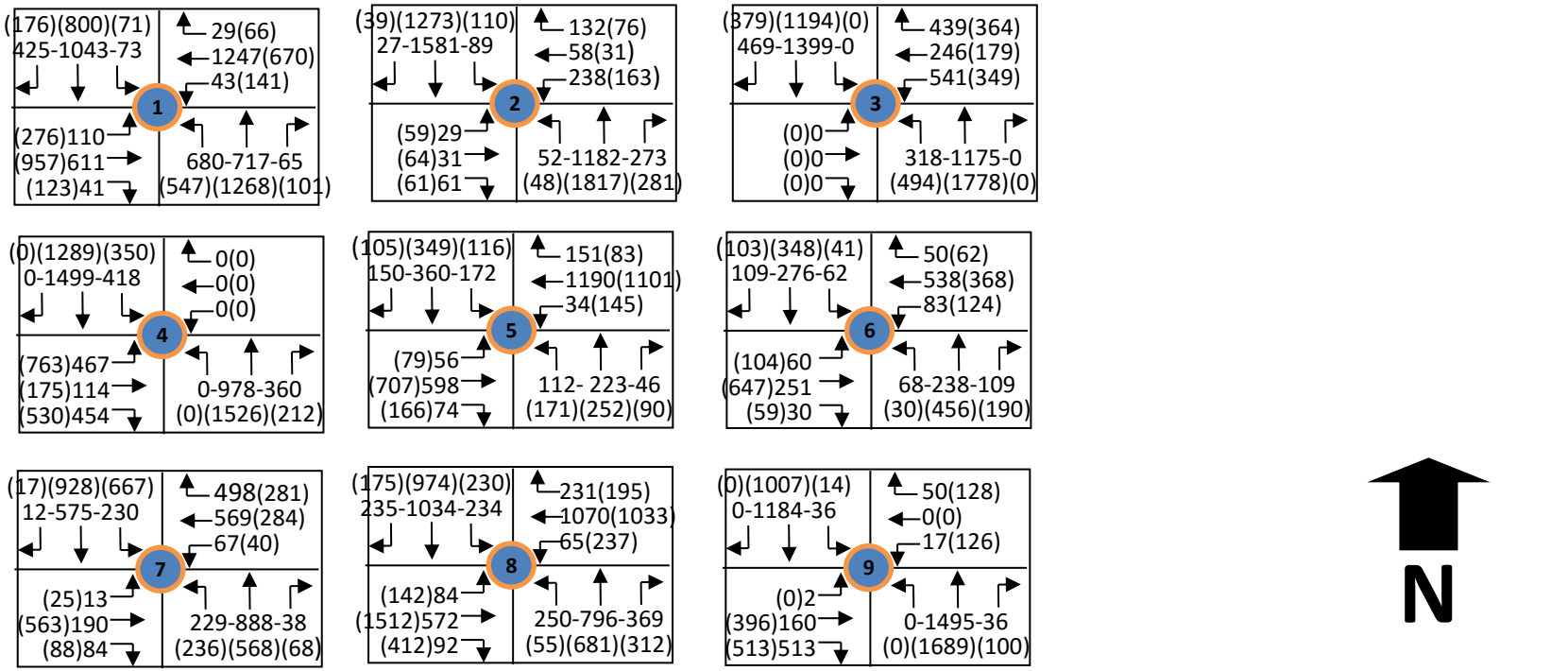

Study Intersections:

1. Santa Anita Avenue and Valley Boulevard
2. Santa Anita Avenue and/Ramona Boulevard
3. Santa Anita Avenue and I-10 WB Ramps (Brockway Ave)
4. Santa Anita Avenue and I-10 EB Ramps (Asher St)
5. Tyler Avenue and Valley Boulevard
6. Tyler Avenue and Ramona Boulevard
7. Valley Boulevard and Ramona Boulevard
8. Peck Road and Valley Boulevard
9. Santa Anita Avenue and Valley Mall (Main Street)

FIGURE 12: FUTURE 2035 PEAK HOUR VOLUME WITH TOD PROJECTS AT STUDY INTERSECTIONS

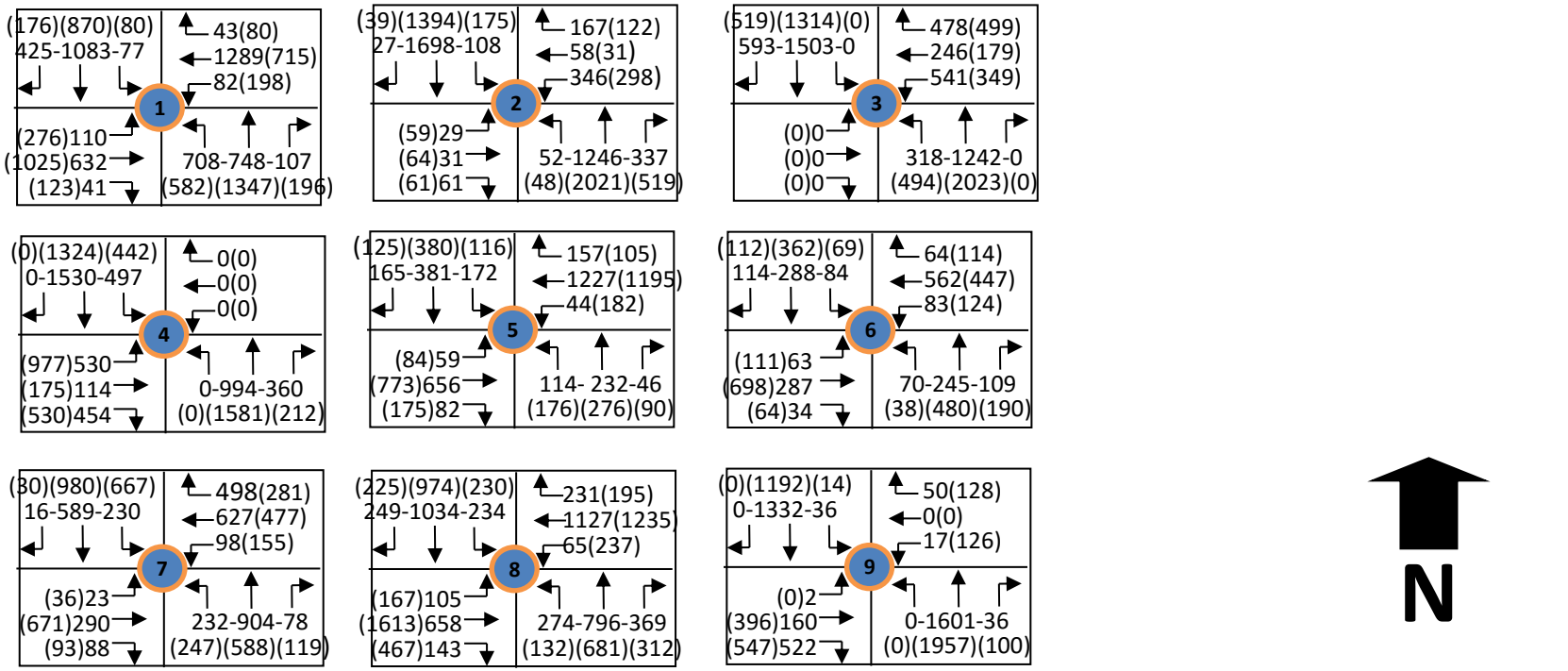

Legend:

1 = Intersection No.

XX(XX) → = AM(PM) Volume in Indicated Direction

Study Intersections:

1. Santa Anita Avenue and Valley Boulevard
2. Santa Anita Avenue and/Ramona Boulevard
3. Santa Anita Avenue and I-10 WB Ramps (Brockway Ave)
4. Santa Anita Avenue and I-10 EB Ramps (Asher St)
5. Tyler Avenue and Valley Boulevard
6. Tyler Avenue and Ramona Boulevard
7. Valley Boulevard and Ramona Boulevard
8. Peck Road and Valley Boulevard
9. Santa Anita Avenue and Valley Mall (Main Street)

TABLE 11
2035 (CUMULATIVE) INTERSECTION LOS WITH AND WITHOUT TOD PROJECTS

INTERSECTION	PEAK HOUR	CUMULATIVE 2035 TRAFFIC CONDITIONS				+/- V/C by TOD Projects
		WITHOUT TOD		WITH TOD		
		V/C	LOS	V/C	LOS	
1. Santa Anita Av/Valley Bl	AM	1.110	F	1.145	F	***0.039***
	PM	0.896	D	0.948	E	***0.052***
2. Santa Anita Av/Ramona Bl	AM	0.605	B	0.656	B	0.051
	PM	0.709	C	0.881	D	0.172
3. Santa Anita Av/I-10 WB Ramps	AM	1.021	F	1.123	F	***0.102***
	PM	0.997	E	1.157	F	***0.160***
4. Santa Anita Av/I-10 EB Ramps	AM	1.095	F	1.144	F	***0.049***
	PM	0.922	E	1.065	F	***0.143***
5. Tyler Av/Valley Bl	AM	0.783	C	0.811	D	0.028
	PM	0.768	C	0.827	D	0.059
6. Tyler Av/Ramona Bl	AM	0.536	A	0.559	A	0.023
	PM	0.635	B	0.668	B	0.033
7. Ramona Bl/Valley Bl	AM	0.863	D	0.892	D	0.029
	PM	0.922	E	1.036	F	***0.114***
8. Peck Rd/Valley Bl	AM	0.966	E	1.012	F	***0.046***
	PM	1.031	F	1.139	F	***0.108***
9. Santa Anita Av/Valley Mall	AM	0.762	C	0.790	C	0.028
	PM	0.802	C	0.879	D	0.077

Note: *Italic* and **Bold** fonts indicate significant impact due to TOD projects

Since the project will significantly impact traffic conditions at these intersections, appropriate off-site traffic mitigation measures will be necessary for the development of the TOD projects to reduce impacts to a level of insignificance.

The results of the LOS analysis for 2035 ambient (without related projects) conditions with and without TOD projects are shown in **Table 12**. As the results indicate, 5 of the 9 study intersections are expected to operate at an unacceptable LOS (i.e. LOS E or F) during either the AM or PM peak hours (or both peak hours) under 2035 ambient traffic conditions (with project). The increase in the V/C ratio at these intersections would exceed the threshold of significant impacts.

These intersections are:

- Santa Anita Avenue and Valley Boulevard
- Santa Anita Avenue and I-10 WB Ramps
- Santa Anita Avenue and I-10 EB Ramps
- Ramona Boulevard and Valley Boulevard
- Peck Road and Valley Boulevard

TABLE 12
2035 (AMBIENT) INTERSECTION LOS WITH AND WITHOUT TOD PROJECTS

INTERSECTION	PEAK HOUR	AMBIENT 2035 TRAFFIC CONDITIONS				+/- V/C by TOD Projects
		WITHOUT TOD		WITH TOD		
		V/C	LOS	V/C	LOS	
1. Santa Anita Av/Valley Bl	AM	1.000	E	1.036	F	***0.036***
	PM	0.785	C	0.830	D	0.045
2. Santa Anita Av/Ramona Bl	AM	0.551	A	0.611	B	0.060
	PM	0.643	B	0.817	D	0.174
3. Santa Anita Av/I-10 WB Ramps	AM	0.948	E	1.046	F	***0.09***8
	PM	0.902	E	1.072	F	***0.170***
4. Santa Anita Av/I-10 EB Ramps	AM	1.020	F	1.070	F	***0.050***
	PM	0.854	D	0.983	E	***0.129***
5. Tyler Av/Valley Bl	AM	0.717	C	0.745	C	0.028
	PM	0.683	B	0.742	C	0.059
6. Tyler Av/Ramona Bl	AM	0.513	A	0.536	A	0.023
	PM	0.611	B	0.653	B	0.042
7. Ramona Bl/Valley Bl	AM	0.788	C	0.817	D	0.029
	PM	0.830	D	0.944	E	***0.114***
8. Peck Rd/Valley Bl	AM	0.912	E	0.958	E	***0.046***
	PM	1.009	F	1.074	F	***0.065***
9. Santa Anita Av/Valley Mall	AM	0.717	C	0.745	C	0.028
	PM	0.762	C	0.839	D	0.077

Note: *Italic* and **Bold** fonts indicate significant impact due to TOD projects

Congestion Management Program Analysis:

The Los Angeles County CMP requires analysis of all CMP arterial monitoring intersections in the project vicinity, including monitored freeway on-ramps or off-ramps, where the proposed project will add 50 or more trips during either the AM or PM weekday peak hours. Where project definition is insufficient for meaningful intersection level of service analysis, CMP arterial segment analysis may substitute for intersection analysis. If CMP arterial segments are being analyzed rather than intersections, the study area must include all segments where the proposed project will add 50 or more peak hour trips (total of both directions). Within the study area, the TIA must analyze at least one segment between monitored CMP intersections.

The CMP also requires an analysis of nearby mainline freeway monitoring locations where the project will add 150 or more trips, in either direction, during either the AM or PM weekday peak hours.

For purposes of the CMP, a significant impact occurs when the proposed project increases traffic demand on a CMP facility by 2% of capacity (V/C ≥.0.02), causing LOS F (V/C > 1.00); if the facility is already at LOS F, a significant impact occurs when the proposed project increases traffic demand on a CMP facility by 2% of capacity (V/C ≥ 0.02).

Although there are no CMP arterial monitoring intersections within the City of El Monte, a total of 5 freeway on-ramp and off-ramp intersections of I-10 Freeway in vicinity of TOD project area were analyzed using project related traffic volumes distributed on to these freeways on- and off-ramps. These are:

- I-10 Freeway EB On/Off-ramp at Santa Anita Avenue
- I-10 Freeway WB On/Off-ramp at Santa Anita Avenue
- I-10 Freeway EB Off-ramp Peck Road
- I-10 Freeway WB On-off-ramps at Peck Road
- I-10 Freeway EB On-ramps at Valley Boulevard

The project traffic distribution indicates there will be a maximum of 214 trips on I-10 Freeway during the PM peak hours in the eastbound direction on the west of Santa Anita Avenue. Also, there will be a maximum of 145 trips on I-10 Freeway during the PM peak hours in the westbound direction on the east of Peck Road. The project traffic volume on the west of Santa Anita Avenue exceeds the 150 trips threshold of freeway monitoring location analysis requirement per Metropolitan Transportation Authority's Congestion Management Program (CMP) guidelines. Therefore, this freeway monitoring location is required to be analyzed as part of this traffic impact analysis. All the freeway monitoring locations in the project vicinity were included in Caltrans Freeway Facilities analysis section of this report.

Mitigation Measures:

2020 Cumulative Conditions with Downtown Main Street TOD SP

The following 5 intersections show impacts, i.e., intersection performance will deteriorate to a level of service (LOS) worse than D, as a result of 2020 cumulative traffic with Downtown Main Street TOD SP projects. These intersections are:

- Santa Anita Avenue and Valley Boulevard
- Santa Anita Avenue and I-10 WB Ramps
- Santa Anita Avenue and I-10 EB Ramps
- Ramona Boulevard and Valley Boulevard
- Peck Road and Valley Boulevard

The following mitigation measures are identified to improve these intersections to perform at LOS D or better:

<u>Santa Anita Avenue and Valley Boulevard</u>

Add 1 right-turn lane by widening and restripe existing through-right lane as through lane on the southbound approach, and restripe the westbound approach to provide 1 left-turn, 2 through and 1 shared through-right lane. Currently, the approach is striped for 2 left-turn, 1 through and 1 shared through-right lane. The proposed mitigation will require 1 additional through lane on the westbound approach. This will improve the intersection LOS from F (V/C ratio = 1.078) to LOS D (V/C ratio = 0.865) during the AM peak hour, and from D (V/C ratio = 0.900) to LOS D (V/C ratio = 0.866) during the PM peak hour.

<u>Santa Anita Avenue and I-10 WB Ramps</u>

Widen and restripe the westbound approach to provide 1 left-turn, 1 shared through-left lane and 2 shared through-right lanes. Currently, the approach is striped for 1 left-turn lane, 1 shared through-left lane and 1 shared through-right lane. The proposed mitigation will require 1 additional shared through-right lane on the westbound approach. This will improve the intersection LOS from F (V/C ratio = 1.006) to LOS C (V/C ratio = 0.766) during the AM peak hour, and from F (V/C ratio = 1.098) to LOS D (V/C ratio = 0.896) during the PM peak hour. Since this intersection is also under Caltrans' jurisdiction, approval on any modifications will be needed from Caltrans.

<u>Santa Anita Avenue and I-10 EB Ramps</u>

Widen and restripe the eastbound approach to provide 2 left-turn, 1 shared left-through lane and 2 right-turn lanes, and restripe the southbound approach to provide 2 left-turn and 2 through lanes. Currently, the eastbound approach is striped for 1 left-turn lane, 1 shared left-through lane and 1 right-turn lane. The proposed mitigation will require 1 additional left-turn lane and 1 additional right-turn lane on the eastbound approach, and 1 additional left-turn lane on the southbound approach. This will improve the intersection

LOS from F (V/C ratio = 1.075) to LOS D (V/C ratio = 0.828) during the AM peak hour, and from F (V/C ratio = 1.011) to LOS C (V/C ratio = 0.766) during the PM peak hour. Since this intersection is under Caltrans' jurisdiction and also under an overpass, major reconstruction works and approval on any modifications will be needed from Caltrans.

Ramona Boulevard and Valley Boulevard

Restripe the southbound approach to provide 2 left-turn lanes, 2 through lanes and 1 right-turn lane. Currently, the approach is striped for 1 left-turn lane, 2 through lanes and 1 right-turn lane. The proposed mitigation will require 1 additional left-turn lane on the southbound approach. This will improve the intersection LOS from D (V/C ratio = 0.840) to LOS C (V/C ratio = 0.781) during the AM peak hour, and from E (V/C ratio = 0.981) to LOS D (V/C ratio = 0.850) during the PM peak hour.

Peck Road and Valley Boulevard

Restripe the eastbound approach to provide 1 left-turn lane, 3 through lanes and 1 right-turn lane, and restripe the westbound approach to provide 2 left-turn lanes, 3 through lanes and 1 right-turn lane. Currently, the eastbound approach is striped for 1 left-turn lane, 2 through lanes and 1 right-turn lane, and the westbound approach is striped for 1 left-turn lane, 2 through lanes and 1 right-turn lane. The proposed mitigation will require 1 additional through lane on the eastbound approach, and 1 additional left-turn lane and 1 additional through lane on the westbound approach. This will improve the intersection LOS from E (V/C ratio = 0.951) to LOS D (V/C ratio = 0.842) during the AM peak hour, and from F (V/C ratio = 1.072) to LOS D (V/C ratio = 0.854) during the PM peak hour.

2035 Cumulative Conditions with Downtown Main Street TOD SP

The following 5 intersections show impacts, i.e., intersection performance will deteriorate to a level of service (LOS) worse than D, as a result of 2035 cumulative traffic with Downtown Main Street TOD SP projects. These intersections are:

- Santa Anita Avenue and Valley Boulevard
- Santa Anita Avenue and I-10 WB Ramps
- Santa Anita Avenue and I-10 EB Ramps
- Ramona Boulevard and Valley Boulevard
- Peck Road and Valley Boulevard

The following mitigation measures are identified to improve these intersections to perform at LOS D or better:

Santa Anita Avenue and Valley Boulevard

In addition to 2020 mitigation (i.e., add 1 right-turn lane by widening, and restripe existing through-right lane as through lane on the southbound approach, and restripe westbound approach to provide 1 left-turn lane, 2 through lanes and 1 shared through-right lane), restripe eastbound approach to provide 2 left-turn lanes, 2 through lanes and 1 shared through-right lane (i.e., provide 1 additional through lane and 1 additional left-turn lane on the eastbound approach). This will improve the intersection LOS from F (V/C ratio = 1.145) to LOS D (V/C ratio = 0.893) during the AM peak hour, and from E (V/C ratio = 0.948) to LOS C (V/C ratio = 0.791) during the PM peak hour.

Santa Anita Avenue and I-10 WB Ramps

In addition to 2020 mitigation (i.e., widen and restripe the westbound approach to provide 1 left-turn, 1 shared through-left lane and 2 shared through-right lanes), restripe northbound approach to provide 1 left-turn lane, 1 shared left-through lane, and 2 through lanes (i.e., provide 1 additional shared left-through lane on the northbound approach). This will improve the intersection LOS from F (V/C ratio = 1.123) to LOS D (V/C ratio = 0.830) during the AM peak hour, and from F (V/C ratio = 1.157) to LOS D (V/C ratio = 0.843) during the PM peak hour. Since this intersection is under Caltrans' jurisdiction and also under an overpass, major reconstruction works and approval on any modifications will be needed from Caltrans.

Santa Anita Avenue and I-10 EB Ramps

With the 2020 mitigation measures (i.e., widen and restripe the eastbound approach to provide 2 left-turn, 1 shared left-through lane and 2 right-turn lanes, and restripe the southbound approach to provide 2 left-turn and 2 through lanes for which Caltrans approval on major reconstruction works and any modifications will be needed as it is under Caltrans' jurisdiction and also under an overpass) installed, no further mitigation will be required. The 2020 mitigation will improve the intersection LOS from F (V/C ratio

= 1.114) to LOS D (V/C ratio = 0.880) during the AM peak hour, and from F (V/C ratio = 1.065) to LOS C (V/C ratio = 0.807) during the PM peak hour under 2035 conditions.

Ramona Boulevard and Valley Boulevard

With the 2020 mitigation measures (i.e., restripe the southbound approach to provide 2 left-turn lanes, 2 through lanes and 1 right-turn lane) installed, no further mitigation will be required. The 2020 mitigation will improve the intersection LOS from D (V/C ratio = 0.892) to LOS D (V/C ratio = 0.828) during the AM peak hour, and from F (V/C ratio = 1.036) to LOS D (V/C ratio = 0.896) during the PM peak hour under 2035 conditions.

Peck Road and Valley Boulevard

In addition to 2020 mitigation (i.e., restripe the eastbound approach to provide 1 left-turn lane, 3 through lanes and 1 right-turn lane, and restripe the westbound approach to provide 2 left-turn lanes, 3 through lanes and 1 right-turn lane), restripe the southbound approach to provide 1 left-turn lane, 3 through lanes and 1 right-turn lane (i.e., provide 1 additional through lane on the southbound approach). This will improve the intersection LOS from F (V/C ratio = 1.012) to LOS C (V/C ratio = 0.789) during the AM peak hour, and from F (V/C ratio = 1.139) to LOS D (V/C ratio = 0.869) during the PM peak hour.

Project Alternatives:

Four alternatives, including a No Project alternative, have been identified to represent a reasonable range of development scenarios that could occur within the TOD Specific Plan area. These are:

- No Project Alternative
- Reduced Density Alternative
- Reduced Specific Plan Area Alternative
- Mobility Alternative

Table 13 provides a brief summary of land use development intensity for these alternatives.

A brief discussion of the Project Alternatives is presented below:

No Project Alternative

The No Project Alternative consists of a scenario under which the Specific Plan as proposed, would not proceed. Under this alternative, future development would occur in accordance with the current City of El Monte's adopted General Plan policies and land use designations and Zoning Ordinance through the year 2035. It is projected that this alternative would result in 163 new multi-family housing units and 162,000 square feet of commercial building development.

Reduced Density Alternative

Under the Reduced Density Alternative, development would occur based on the land use concept and development guidelines of the proposed Specific Plan, with the exception that the allowable residential densities and commercial intensities for all land uses would be reduced by 25 percent. It is projected that this alternative would result in a net increase of 1,650 housing units and 375,000 square feet of commercial building area by the year 2035. Of the 375,000 square feet of commercial use, 244,000 square feet is anticipated for retail, 75,000 square feet for restaurant, and 56,000 square feet for office uses.

Reduced Plan Area Alternative

The Reduced Plan Area Alternative would result in a reduction in the Specific Plan area from the current 115 acres to approximately 39 acres. This area would include only the Main Street Sub-Area and the Station Sub-Area. The reduced area under this alternative would include the El Monte Metrolink Station, the area on the east side of Santa Anita Avenue south of Valley Boulevard, and properties along Valley Mall/Main Street. The objectives for transit oriented development would remain, but land use regulations and circulation/infrastructure improvements would be focused on the underutilized areas within the reduced Specific Plan area. This alternative would result in an increase of only 600 housing units and 120,000 square feet of commercial building area by 2035.

TABLE 13
PROJECT ALTERNATIVES

Net Increase in Potential Development from 2016 to 2035					
Land Use	**Proposed Specific Plan[1]**	**Project Alternatives**			
		No Project[2]	**Reduced Density[3]**	**Reduced Specific Plan Area[4]**	**Mobility[5]**
Residential (DU)	**2,200**	**163**	**1,650**	**600**	**2.200**
Commercial (SF)	**500,000**	**162,000**	**375,000**	**120,000**	**500,000**
Retail	325,000	106,000	244,000	78,000	325,000
Restaurant	100,000	32,000	75,000	24,000	100,000
Office	75,000	24,000	56,000	18,000	75,000

Notes:

[1] Distribution of commercial uses: 65% retail; 20% restaurant; and 15% office
[2] Growth in accordance with current Zoning Ordinance
[3] Reduction of density/intensity by 25% relative to the proposed Specific Plan
[4] Reduced Specific Plan area includes only the Main Street and Station Sub-Areas
[5] No change in the level of anticipated growth relative to the proposed Specific Plan

Projected commercial building area under this alternative is expected to include 78,000 square feet of retail, 24,000 square feet of restaurant, and 18,000 square feet of office building area.

Complete Streets Mobility Alternative

Under the Complete Streets Mobility Alternative, the same level of development would occur as the proposed Specific Plan. The Valley Mall/Main Street roadway segment from Valley Boulevard on the west to Ramona Boulevard on the east would be closed to vehicular traffic. This 0.65-mile segment would be converted into a pedestrian zone with public and commercial uses. Public uses could consist of parks, plazas, playgrounds, and stages. Commercial uses could include vending kiosks, outdoor dining, and farmer's markets. This alternative would reduce the number of roadways in the Specific Plan and increase the amount of land area devoted to pedestrians and public spaces creating a more complete streets orientation to the Specific Plan area. As a result, this alternative would also include the elimination of the two Valley Mall intersections, one at Santa Anita on the west and one at Ramona Boulevard on the east thus reducing the number of conflict points between pedestrians and vehicles and improve traffic congestion in and around the area.

Trip Generation by Project Alternatives

The daily and peak hour trips expected to be generated from these alternative projects have been estimated by using rates from Institute of Transportation Engineers' publication "Trip Generation", 9th Edition.

Table 14 shows trip generation estimates from these 4 alternative projects. Note that the mobility alternative will generate the same number of trips as the Project.

Table 15 shows a comparative evaluation trips generated by the Project and the alternative projects. Of the 4 alternatives, the Mobility alternative will generate the maximum number of trips (i.e., same as the Project) while the No Project alternative will generate the minimum number of trips (22% of the Project for daily and PM peak hour, 15% of the Project for AM peak hour). The Reduced Area alternative will generate slightly more trips than the No Project alternative (25% of the Project for daily and PM peak hour, 26% of the Project for AM peak hour).

TABLE 14
TRIP GENERATION BY PROJECT ALTERNATIVES

ITE Land Use Code	Land Use	Quantity	Unit	Trip Generation Rates							Estimated Trip Generation						
				Daily	AM Total	AM In	AM Out	PM Total	PM In	PM Out	Daily	AM Total	AM In	AM Out	PM Total	PM In	PM Out
Alternative: No Project (163 DU Residential Units, 162,000 SF Commercial Floor Square Feet)																	
220	Residential Multi-Family[1]	163	DU	6.65	0.51	20%	80%	0.62	65%	35%	1,084	83	17	67	101	66	35
820	Commercial (65%) Retail[2]	106.000	KSF	42.94	1.00	61%	39%	3.73	49%	51%	4,552	106	65	41	395	194	202
	Less Pass-by Trips (20%)										-910	-21	-13	-8	-79	-39	-40
931	Commercial (20%) Restaurant[3]	32.000	KSF	89.95	0.81	50%	50%	7.49	67%	33%	2,878	26	13	13	240	161	79
710	Commercial (15%) Office[4]	24,000	KSF	11.03	1.56	88%	12%	1.49	17%	83%	265	37	33	4	36	6	30
Total											7,868	231	114	117	693	387	305
Internal Capture (20%)											-1,574	-46	-23	-23	-139	-77	-61
Transit Credit (20%)											-1,574	-46	-23	-23	-139	-77	-61
Net Total											4,721	139	69	70	416	232	183

Notes:

[1] Multi-Family Apartments assumed
[2] Shopping Centers assumed
[3] Quality Restaurants assumed
[4] General Offices assumed

TABLE 14
TRIP GENERATION BY PROJECT ALTERNATIVES (Cont.)

ITE Land Use Code	Land Use	Quantity	Unit	Trip Generation Rates							Estimated Trip Generation						
				Daily	AM Total	AM In	AM Out	PM Total	PM In	PM Out	Daily	AM Total	AM In	AM Out	PM Total	PM In	PM Out
Alternative: Reduced Density (1,650 DU Residential Units, 375,000 SF Commercial Floor Square Feet)																	
220	Residential Multi-Family[1]	1,650	DU	6.65	0.51	20%	80%	0.62	65%	35%	10,973	842	168	673	1,023	665	358
820	Commercial (65%) Retail[2]	243.750	KSF	42.94	1.00	61%	39%	3.73	49%	51%	10,467	244	149	95	909	446	464
	Less Pass-by Trips (20%)										-2,093	-49	-30	-19	-182	-89	-93
931	Commercial (20%) Restaurant[3]	75.000	KSF	89.95	0.81	50%	50%	7.49	67%	33%	6,746	61	30	30	562	376	185
710	Commercial (15%) Office[4]	56.25	KSF	11.03	1.56	88%	12%	1.49	17%	83%	620	88	77	11	84	14	70
Total											26,712	1,185	395	790	2,396	1,412	984
Internal Capture (20%)											-5,342	-237	-79	-158	-479	-282	-197
Transit Credit (20%)											-5,342	-237	-79	-158	-479	-282	-197
Net Total											16,027	711	237	474	1,438	847	590

Notes:

1 Multi-Family Apartments assumed
2 Shopping Centers assumed
3 Quality Restaurants assumed
4 General Offices assumed

TABLE 14
TRIP GENERATION BY PROJECT ALTERNATIVES (Cont.)

ITE Land Use Code	Land Use	Quantity	Unit	Trip Generation Rates							Estimated Trip Generation						
				Daily	AM Total	AM In	AM Out	PM Total	PM In	PM Out	Daily	AM Total	AM In	AM Out	PM Total	PM In	PM Out
Alternative: Reduced Specific Plan Area (1,650 DU Residential Units, 120,000 SF Commercial Floor Square Feet)																	
220	Residential Multi-Family[1]	600	DU	6.65	0.51	20%	80%	0.62	65%	35%	3,990	306	61	245	372	242	130
820	Commercial (65%) Retail[2]	78.000	KSF	42.94	1.00	61%	39%	3.73	49%	51%	3,349	78	48	30	291	143	148
	Less Pass-by Trips (20%)										-670	-16	-10	-6	-58	-29	-30
931	Commercial (20%) Restaurant[3]	24.000	KSF	89.95	0.81	50%	50%	7.49	67%	33%	2,159	19	10	10	180	120	59
710	Commercial (15%) Office[4]	18.000	KSF	11.03	1.56	88%	12%	1.49	17%	83%	199	28	25	3	27	5	22
Total											9,027	416	134	282	811	481	330
Internal Capture (20%)											-1,805	-83	-27	-56	-162	-96	-66
Transit Credit (20%)											-1,805	-83	-27	-56	-162	-96	-66
Net Total											5,416	250	80	169	487	289	198

Notes:
1 Multi-Family Apartments assumed
2 Shopping Centers assumed
3 Quality Restaurants assumed
4 General Offices assumed

TABLE 14
TRIP GENERATION BY PROJECT ALTERNATIVES (Cont.)

ITE Land Use Code	Land Use	Quantity	Unit	Trip Generation Rates							Estimated Trip Generation						
				Daily	AM Total	AM In	AM Out	PM Total	PM In	PM Out	Daily	AM Total	AM In	AM Out	PM Total	PM In	PM Out
Alternative: Mobility (2,200 DU Residential Units, 500,000 SF Commercial Floor Square Feet)																	
220	Residential Multi-Family[1]	2,200	DU	6.65	0.51	20%	80%	0.62	65%	35%	14,630	1,122	224	898	1,364	887	477
820	Commercial (65%) Retail[2]	325.000	KSF	42.94	1.00	61%	39%	3.73	49%	51%	13,956	325	198	127	1,212	594	618
	Less Pass-by Trips (20%)										-2,791	-65	-40	-25	-242	-119	-124
931	Commercial (20%) Restaurant[3]	100.000	KSF	89.95	0.81	50%	50%	7.49	67%	33%	8,995	81	41	41	749	502	247
710	Commercial (15%) Office[4]	75.000	KSF	11.03	1.56	88%	12%	1.49	17%	83%	827	117	103	14	112	19	93
Total											35,617	1,580	526	1,054	3,195	1,883	1,312
Internal Capture (20%)											-7,123	-316	-105	-211	-639	-377	-262
Transit Credit (20%)											-7,123	-316	-105	-211	-639	-377	-262
Net Total											21,370	948	316	632	1,917	1,130	787

Notes:

1 Multi-Family Apartments assumed
2 Shopping Centers assumed
3 Quality Restaurants assumed
4 General Offices assumed

TABLE 15
COMPARISON OF TRIPS GENERATED BY THE PROJECT AND ALTERNATIVES

Type of Trips	Project		No Project		Reduced Density		Reduced Area		Mobility	
	Number	% of Project	Number	% of Project	Number	% of Project	Number	% of Project	Number	% of Project
Daily Trips	21,370	100%	4,721	22%	16,027	75%	5,416	25%	21,370	100%
AM Peak Hour Trips	948	100%	139	15%	711	75%	250	26%	948	100%
PM Peak Hour Trips	1,917	100%	416	22%	1,438	75%	487	25%	1,917	100%

Analysis of Caltrans' Facilities:

Freeway Ramp Intersections

The Project's impacts at the following Freeway Ramp intersections, located in the project study area, have been analyzed since these are under Caltrans' jurisdiction:

- Santa Anita Avenue and I-10 Westbound Ramps (Brockway Ave) – Signalized
- Santa Anita Avenue and I-10 Eastbound Ramps (Asher St) - Signalized
- Peck Road and I-10 Eastbound Ramps (Asher St) - Unsignalized
- Valley Boulevard and I-10 Westbound Ramps - Unsignalized

Analysis Methodology

Caltrans' *Guide to Preparation of Traffic Impact Studies*, December 2002, specifies the use of Highway Capacity Manual (HCM) method of intersection capacity and LOS analysis to evaluate performance of signalized and unsignalized intersections during the weekday morning and evening peak hours. Therefore, the Synchro Software based on the 2010 Highway Capacity Manual (HCM) procedures was used for the analysis of Caltrans' intersections.

The HCM analysis methodology describes the operation of an intersection using a range of LOS from LOS A (free- flow conditions) to LOS F (severely congested conditions), from the amount of stopped delay experienced per vehicle as shown in **Table 16.**

LOS is based on the average stopped delay per vehicle for all movements of signalized intersections and all-way stop-controlled intersections. For one-way or two-way stop-controlled intersections, LOS is based on the performance of the worst stop-controlled approach. The Caltrans threshold for an acceptable peak hour intersection operation is LOS D or better.

Thresholds of Significance

Caltrans has established the following thresholds of significant impact at Freeway Ramp intersections for weekday AM and PM peak-hour periods:

- A significant impact occurs at a Freeway Ramp intersection when the addition of project-generated trips causes its peak hour level of service to change from an acceptable operation (LOS A, B, C, or D) to a deficient operation (LOS E or F).

Existing 2016 Conditions

Figure 13 shows existing lane configuration at the Freeway Ramp intersections.

Figure 14 shows existing 2016 traffic volumes at the Freeway Ramp intersections during the AM and PM peak hours. These volumes were based on traffic counts of turning movements conducted for other recent traffic studies for some of the related projects.

Table 17 summarizes the Existing 2016 AM and PM peak hour operations of the Freeway Ramp intersections. Detailed HCM LOS analysis sheets are contained in the Technical Appendix of this report.

TABLE 16
HCM LEVEL OF SERVICE CRITERIA FOR CALTRANS INTERSECTIONS

Level of Service	Two-Way or All-Way Stop Controlled Intersection Average Delay per Vehicle (sec)	Signalized Intersection Average Delay per Vehicle (sec)
A	0 - 10	< or = 10
B	> 10 - 15	> 10 - 20
C	> 15 - 25	> 20 - 35
D	> 25 - 35	> 35 - 55
E	> 35 - 50	> 55 - 80
F	> 50	> 80 or a V/C ratio equal or greater than 1.0

FIGURE 13: EXISTING CALTRANS INTERSECTION LANE CONFIGURATION

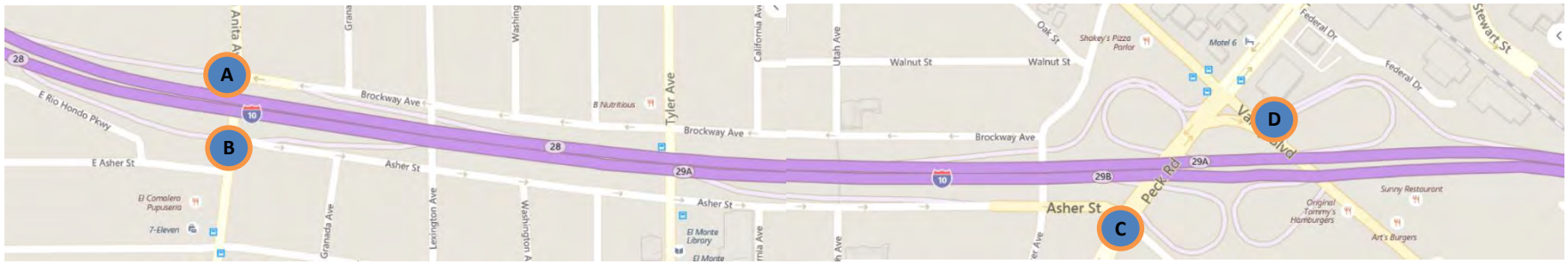

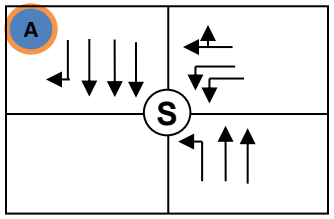

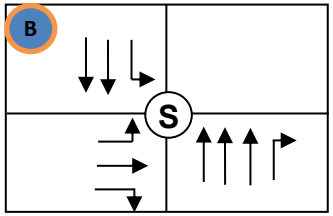

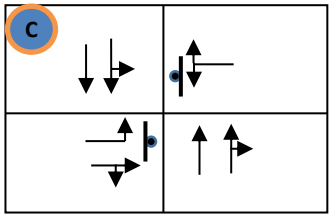

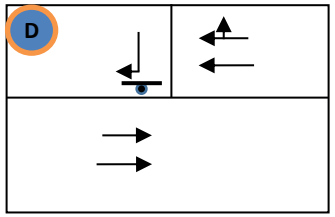

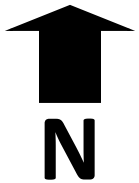

Study Intersections:

A. Santa Anita Avenue and I-10 WB Ramps (Brockway Ave)
B. Santa Anita Avenue and I-10 EB Ramps (Asher St)
C. Peck Road and I-10 EB Ramps (Asher St)
D. Valley Boulevard and I-10 WB Ramps

Legend:
A = Intersection No. S = Signal = STOP Sign
→ = Travel lane provided for Indicated movement

FIGURE 14: TRAFFIC VOLUMES AT CALTRANS INTERSECTIONS (2016 CONDITIONS)

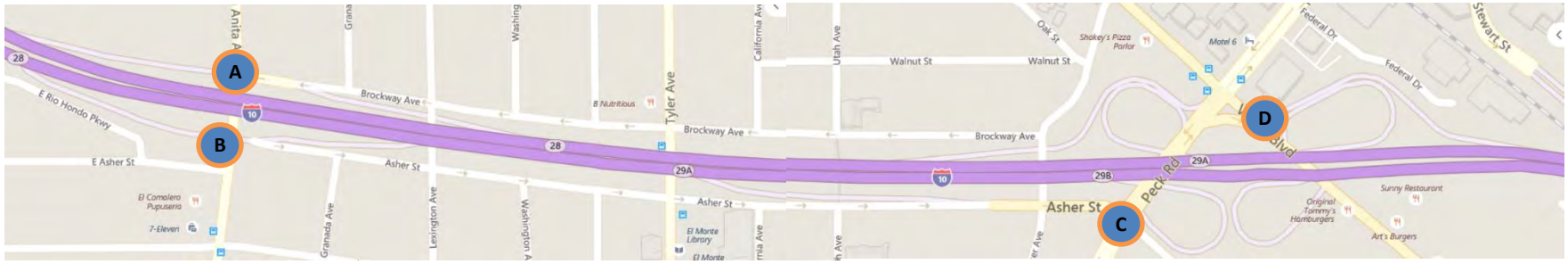

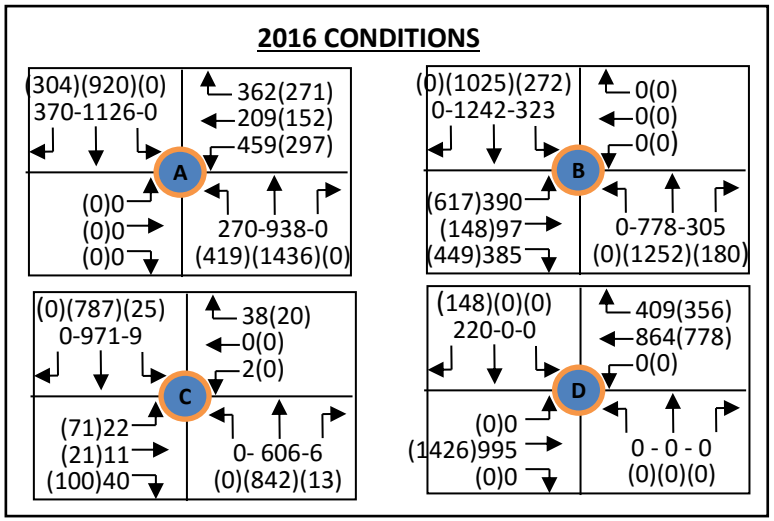

Study Intersections:

A. Santa Anita Avenue and I-10 WB Ramps (Brockway Ave)
B. Santa Anita Avenue and I-10 EB Ramps (Asher St)
C. Peck Road and I-10 EB Ramps (Asher St)
D. Valley Boulevard and I-10 WB Ramps

Legend:

A = Intersection No.
XX(XX) → = AM(PM) Volume in Indicated Direction

N

TABLE 17
EXISTING (2016) LEVEL OF SERVICE AT FREEWAY RAMP INTERSECTIONS

Intersection	Peak Hour	Existing 2016 Conditions	
		LOS	Delay, Sec
A. Santa Anita Ave and I-10 WB Ramps (Brockway Av)-Signalized	AM PM	C E	33.2 74.5
B. Santa Anita Avenue and I-10 EB Ramps (Asher St)-Signalized	AM PM	C D	27.1 35.0
C. Peck Road and I-10 EB Ramps (Asher St)-Unsignalized	AM PM	A B	1.9 7.1
D. Valley Boulevard and I-10 WB Ramps-Unsignalized	AM PM	B A	2.6 1.0

All Caltrans' intersections operate acceptably, at LOS D or better with an exception of the intersection of Santa Anita Avenue and I-10 Westbound Ramps, which operates at LOS E during the PM peak-hour periods under existing 2016 traffic conditions.

However, improvements have been identified to achieve City of El Monte's minimum LOS standards as this intersection is impacted under future conditions per City of El Monte thresholds of significance.

Opening Year (2020) Without-Project and With-Project Traffic Conditions

Traffic volumes at the study intersections for 2020 was developed from existing 2016 volumes using a growth factor of 0.82 percent per year between 2016 and 2020, consistent with traffic growth projection factors established by Los Angeles County Congestion Management Plan. Volumes from related projects were distributed to these intersections, and added to the projected 2020 volumes to develop 2020 volumes Without-Project conditions. Similarly, Project-related traffic volumes were distributed to the study intersections, and added to the 2020 Without-Project volumes to develop 2020 With-Project volumes.

Figure 15 shows related project traffic volumes distributed to the study intersections for the AM and PM peak hours.

Figure 16 shows Project-related traffic volumes distributed to the study intersections for the AM and PM peak hours.

Figure 17 shows 2020 traffic volumes Without-Project and With-Project conditions at the study intersections for the AM and PM peak hours.

Table 18 summarizes the Opening Year (2020) Without-Project and With-Project AM and PM peak hour operations of the Freeway Ramp intersections. Detailed HCM LOS analysis sheets are contained in the Technical Appendix of this report.

All Caltrans' intersections operate acceptably, at LOS D or better, with an exception of the intersection of Santa Anita Avenue and I-10 Westbound Ramps, which operates at LOS F during the PM peak-hour periods under both Without-Project and With-Project traffic conditions, and the intersection of Santa Anita Avenue and I-10 Eastbound Ramps, which operates at LOS E during the AM peak-hour periods under Without-Project conditions and at LOS F under With-Project traffic conditions, and at LOS F during the PM peak-hour periods under With-Project traffic conditions.

However, improvements have been identified to achieve City of El Monte's minimum LOS standards as both these intersections are impacted under future conditions per City of El Monte thresholds of significance.

FIGURE 15: TRAFFIC VOLUMES FROM RELATED PROJECTS AT CALTRANS INTERSECTIONS

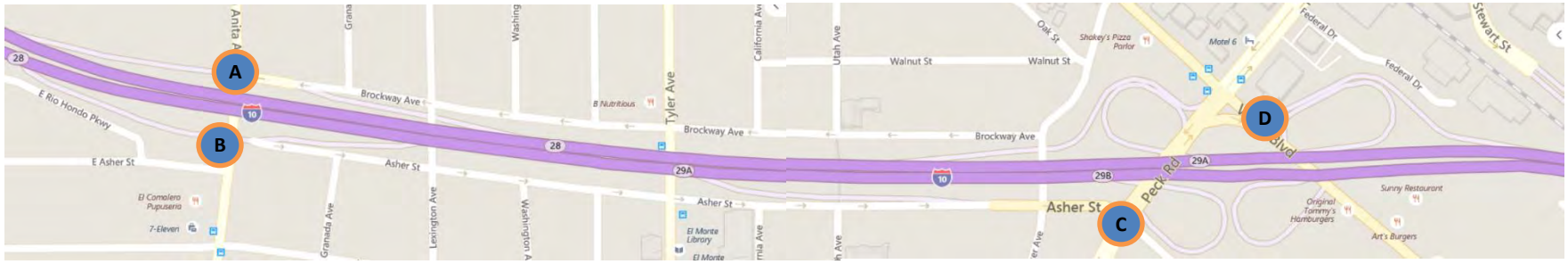

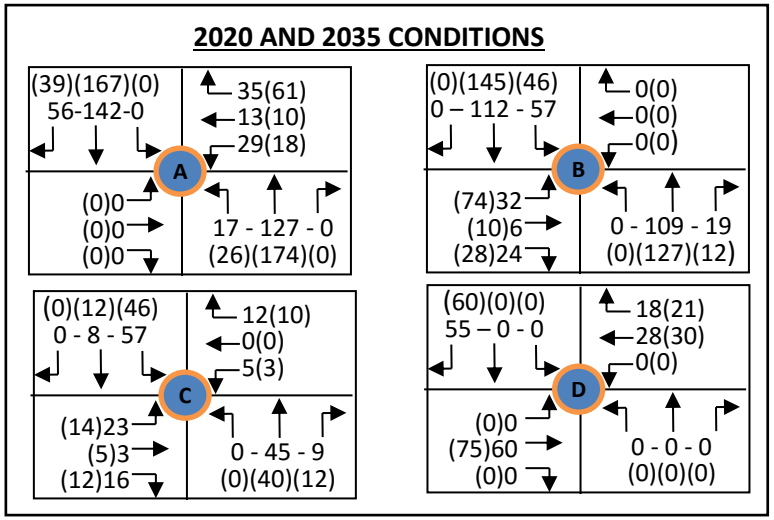

Study Intersections:

A. Santa Anita Avenue and I-10 WB Ramps (Brockway Ave)
B. Santa Anita Avenue and I-10 EB Ramps (Asher St)
C. Peck Road and I-10 EB Ramps (Asher St)
D. Valley Boulevard and I-10 WB Ramps

Legend:

A = Intersection No.
XX(XX) → = AM(PM) Volume in Indicated Direction

N

FIGURE 16: TRAFFIC VOLUMES FROM THE PROJECT AT CALTRANS INTERSECTIONS

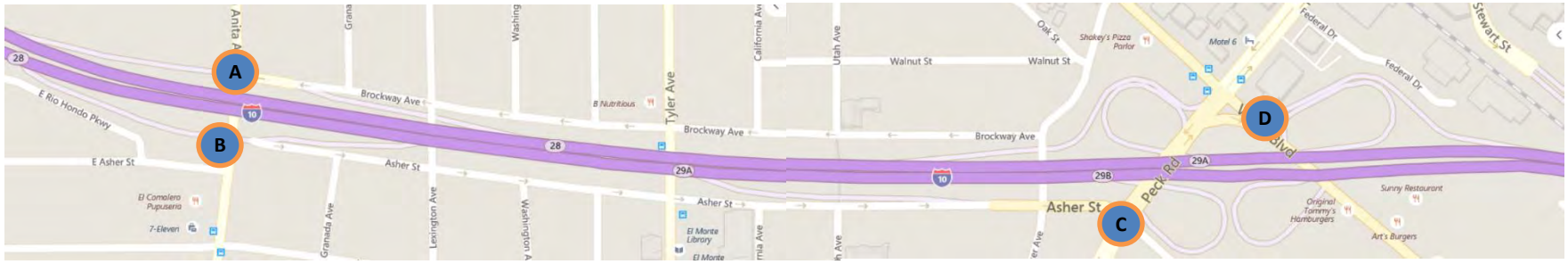

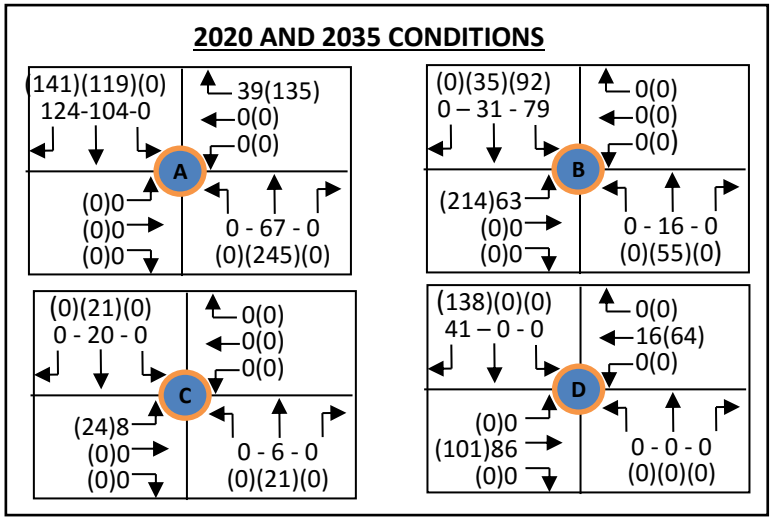

Study Intersections:

E. Santa Anita Avenue and I-10 WB Ramps (Brockway Ave)
F. Santa Anita Avenue and I-10 EB Ramps (Asher St)
G. Peck Road and I-10 EB Ramps (Asher St)
H. Valley Boulevard and I-10 WB Ramps

Legend:

A = Intersection No.
XX(XX) → = AM(PM) Volume in Indicated Direction

N

FIGURE 17: TRAFFIC VOLUMES AT CALTRANS INTERSECTIONS (2020 CONDITIONS)

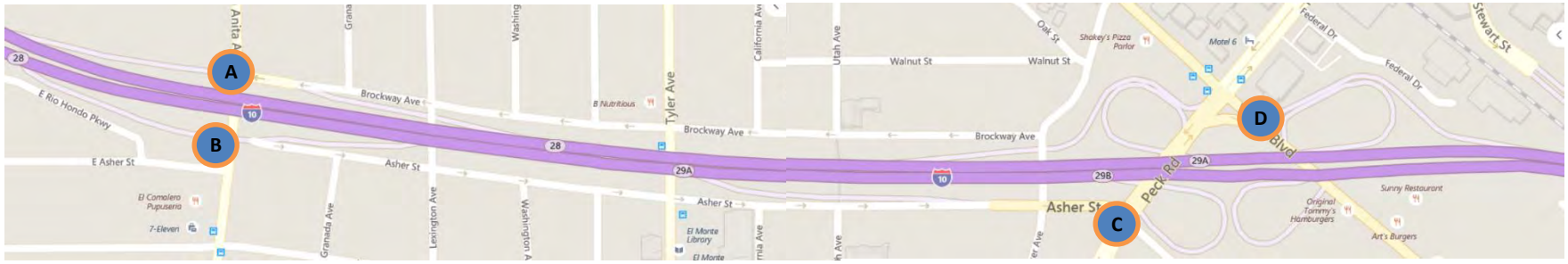

2020 CONDITIONS WITHOUT PROJECT

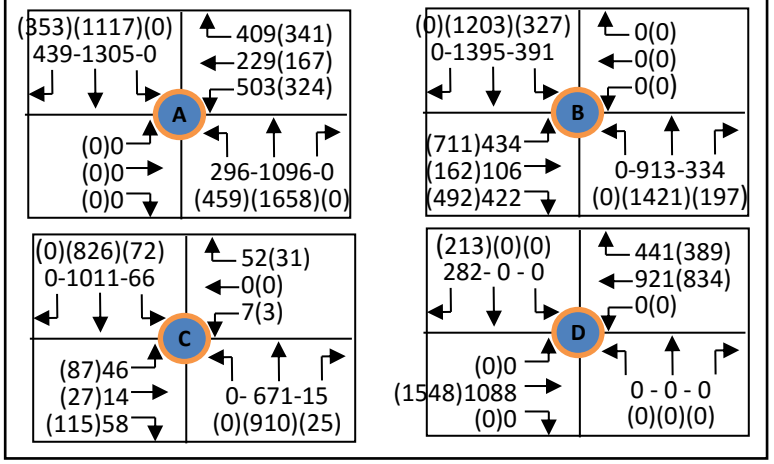

2020 CONDITIONS WITH PROJECT

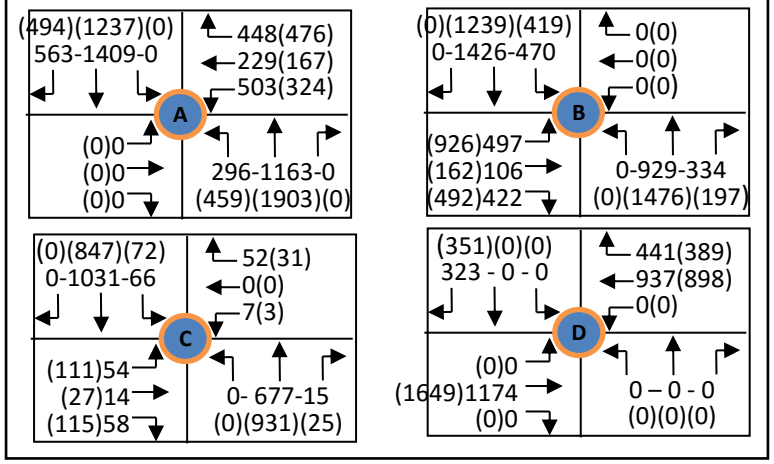

Study Intersections:

A. Santa Anita Avenue and I-10 WB Ramps (Brockway Ave)
B. Santa Anita Avenue and I-10 EB Ramps (Asher St)
C. Peck Road and I-10 EB Ramps (Asher St)
D. Valley Boulevard and I-10 WB Ramps

Legend:

A = Intersection No.
XX(XX) → = AM(PM) Volume in Indicated Direction

N

TABLE 18
FUTURE YEAR (2020) LEVEL OF SERVICE AT FREEWAY RAMP INTERSECTIONS

Intersection	Peak Hour	Future 2020 Without Project		Future 2020 With Project		Significant Impact Yes/No
		LOS	Delay, Sec	LOS	Delay, Sec	
A. Santa Anita Ave and I-10 WB Ramps (Brockway Av)-Signalized	AM	D	41.6	D	44.1	No
	PM	F	126.7	F	163.4	Yes
B. Santa Anita Avenue and I-10 EB Ramps (Asher St)-Signalized	AM	E	65.7	F	106.4	Yes
	PM	D	54.8	F	108.7	Yes
C. Peck Road and I-10 EB Ramps (Asher St)-Unsignalized	AM	C	6.1	C	8.2	No
	PM	C	23.8	D	40.6	No
D. Valley Boulevard and I-10 WB Ramps-Unsignalized	AM	B	5.4	C	9.0	No
	PM	B	1.8	C	8.6	No

Future Year (2035) Without-Project and With-Project Traffic Conditions

Traffic volumes at the study intersections for 2035 was developed from projected 2020 volumes using a growth factor of 0.52 percent per year between 2020 and 2035, consistent with traffic growth projection factors established by Los Angeles County Congestion Management Plan for the study area. Volumes from related projects were added to the projected 2035 volumes to develop 2035 volumes Without-Project conditions. Similarly, Project-related traffic volumes were added to the 2035 Without-Project volumes to develop 2035 With-Project volumes.

Figure 18 shows 2035 traffic volumes Without-Project and With-Project conditions at the study intersections for the AM and PM peak hours.

Table 19 summarizes the Future Year (2035) Without-Project and With-Project AM and PM peak hour operation of the Freeway Ramp intersections. Detailed HCM LOS analysis sheets are contained in the Technical Appendix of this report.

All Caltrans' intersections operate acceptably, at LOS D or better, with an exception of the intersection of Santa Anita Avenue and I-10 Westbound Ramps, which operates at LOS F during the PM peak-hour periods under both Without-Project and With-Project traffic conditions, and the intersection of Santa Anita Avenue and I-10 Eastbound Ramps, which operates at LOS F during both the AM and PM peak-hour periods under both Without-Project conditions and With-Project traffic conditions.

However, improvements have been identified to achieve City of El Monte's minimum LOS standards as both these intersections are impacted under future conditions per City of El Monte thresholds of significance.

FIGURE 18: TRAFFIC VOLUMES AT CALTRANS INTERSECTIONS (2035 CONDITIONS)

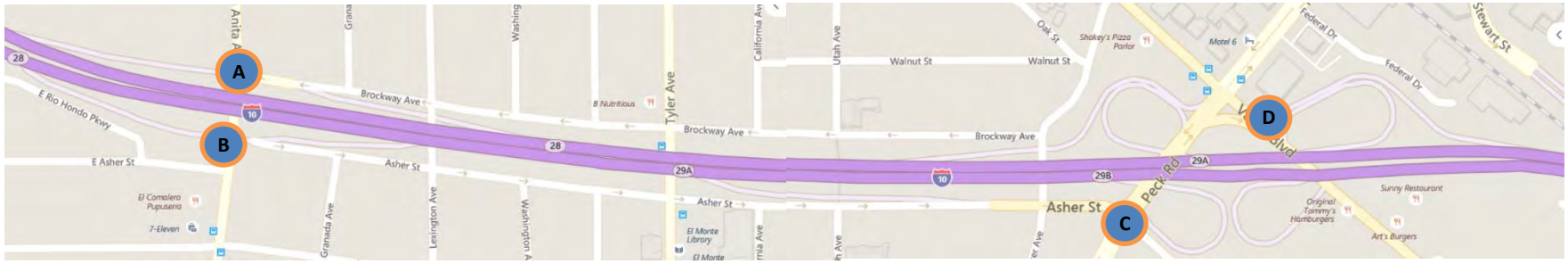

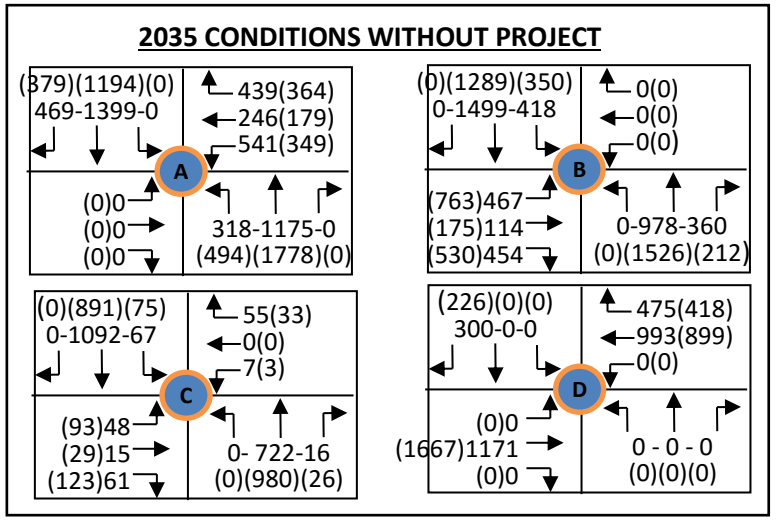

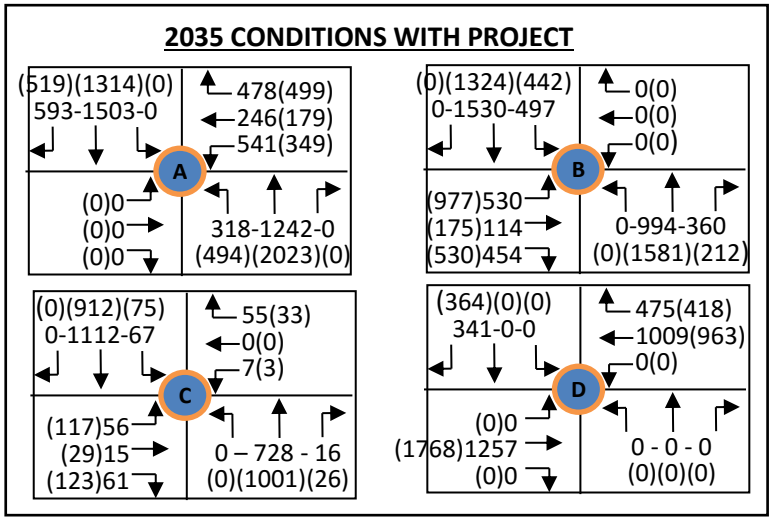

Study Intersections:

A. Santa Anita Avenue and I-10 WB Ramps (Brockway Ave)
B. Santa Anita Avenue and I-10 EB Ramps (Asher St)
C. Peck Road and I-10 EB Ramps (Asher St)
D. Valley Boulevard and I-10 WB Ramps

Legend:

A = Intersection No.

XX(XX) → = AM(PM) Volume in Indicated Direction

N

TABLE 19
FUTURE YEAR (2035) LEVEL OF SERVICE AT FREEWAY RAMP INTERSECTIONS

Intersection	Peak Hour	Future 2035 Without Project		Future 2035 With Project		Significant Impact Yes/No
		LOS	Delay, Sec	LOS	Delay, Sec	
A. Santa Anita Ave and I-10 WB Ramps (Brockway Av)-Signalized	AM	D	50.2	D	54.1	No
	PM	F	155.5	F	190.8	Yes
B. Santa Anita Avenue and I-10 EB Ramps (Asher St)-Signalized	AM	F	90.9	F	127.6	Yes
	PM	F	67.5	F	123.5	Yes
C. Peck Road and I-10 EB Ramps (Asher St)-Unsignalized	AM	C	11.3	D	15.4	No
	PM	D	40.0	D	63.8	No
D. Valley Boulevard and I-10 WB Ramps-Unsignalized	AM	C	8.6	C	14.4	No
	PM	B	2.2	C	12.3	No

Ramp Queuing Analysis

Per Caltrans' *Guide to Preparation of Traffic Impact Studies*, December 2002, a project causes a significant impact at a State Highway ramp if it adds at least 10 weekday peak hour trips when the ramp is operating at a deficient level of service (i.e., queuing exceeds storage capacity). This threshold was used for the analysis of potential impacts at on- and off-ramps that would be used by the Project traffic.

Freeway Off-Ramp Queuing

The Project is expected to add peak hour trips at the following I-10 freeway off-ramps in the study area:

- I-10 Westbound Off-Ramp at Brockway Avenue/Santa Anita Avenue: 39 AM peak hour trips, and 135 PM peak-hour trips.
- I-10 Eastbound Off-Ramp at Asher Street/Santa Anita Avenue: 63 AM morning peak-hour trips and 214 evening peak-hour trips.
- I-10 Eastbound Off-Ramp at Asher Street/Peck Road: 8 AM peak-hour trips, and 24 PM peak-hour trips.
- I-10 Eastbound Off-Ramp at Peck Road: 10 AM peak-hour trips, and 32 PM peak-hour trips
- I-10 Westbound Off-Ramp at Valley Boulevard: 41 AM peak-hour trips, and 138 PM peak-hour trips.

The Project will contribute no (0) additional trips at any other off-ramps in the study area. Therefore, no other off-ramps are included in this analysis.

Off-ramp storage was obtained from aerial photographs and verified in the field. Observations were made at the 5 study off-ramps where the Project will add traffic to verify existing operations during morning and evening peak hours at all three ramps. No back-ups onto I-10 were observed at these 5 off-ramps during either the weekday AM or PM peak hour periods and ramp storage length adequately accommodated ramp queues at each location.

Table 20 provides a summary of impacts at the five I-10 off-ramps which will be used by the Project.

The Project does not add traffic to any ramps which are deficient. Therefore, there are no Project-related impacts on Caltrans' off-ramps.

TABLE 20
PROJECT IMPACTS AT FREEWAY OFF-RAMPS

Off-Ramp	Peak Hour	Project Trips	Impact Threshold	Storage Length Greater than Observed Queue Yes/No	Significant Impact Yes/No
I-10 WB Off-Ramp at Brockway Ave/Santa Anita Ave	AM	39	10	Yes	No
	PM	135	10	Yes	No
I-10 EB Off-Ramp at Asher St/Santa Anita Ave	AM	63	10	Yes	No
	PM	214	10	Yes	No
I-10 EB Off-Ramp at Asher St/ Peck Road	AM	8	10	Yes	No
	PM	24	10	Yes	No
I-10 EB Off-Ramp at Asher St/ Peck Road	AM	10	10	Yes	No
	PM	32	10	Yes	No
I-10 WB Off-Ramp at Valley Boulevard	AM	41	10	Yes	No
	PM	138	10	Yes	No

Freeway On-Ramp Queuing

The Project is expected to add peak hour trips at the following I-10 freeway on-ramps in the study area:

- I-10 Westbound On-Ramp from Brockway Avenue/Santa Anita Avenue: 124 AM peak-hour trips, and 141 PM peak-hour trips.
- I-10 Eastbound On-Ramp from Asher Street/Santa Anita Avenue: 79 AM peak hour trips, and 92 PM peak-hour trips.
- I-10 Westbound On-Ramp from Peck Road: 31 AM peak hour trips, and 34 PM peak-hour trips.
- I-10 Eastbound On-Ramp from Valley Boulevard: 62 AM peak hour trips, and 71 PM peak-hour trips.

The Project will contribute no (0) additional trips at any other on-ramps in the study area. Therefore, no other on-ramps are included in this analysis.

On-ramp storage was obtained from aerial maps, and verified in the field. Observations were made at the 4 study on-ramps during AM and PM peak-hours to determine whether the vehicle queues exceeded the storage capacity of the on- ramps.

Each of the study on-ramps was subject to a ramp metering which disperses vehicles entering the freeway mainline gradually rather than in a group. The ramp meter typically turns green to release a vehicle with a frequency between 4 and 6 seconds. During actual operations, the frequency of the ramp meter is dynamic and subject to loop detectors in the mainline freeway measuring roadway speeds and congestion. If a ramp meter operates with a 5-second frequency consistently for one hour, then a maximum of 720 vehicles can enter the freeway from the metered lane.

The following information was collected at the study on-ramps:

- The number of vehicles entering the on-ramp mixed-flow lane on a 1-minute frequency; and
- Whether the on-ramp storage is exceeded by queuing vehicles at the end of each minute.

Traffic using the ramp's High-Occupancy-Vehicle (HOV) lane were not included in the analysis, since they do not stop at the meter.

On-ramp storage varies for each ramp but is generally described as the area between the ramp meter stop line and the adjacent arterial. Based on aerial maps, the study on-ramp storage lengths were determined.

Table 21 provides all collected data for the 4 study on-ramps and a summary of project's impacts at the on-ramps. On-ramp storage capacity was not exceeded at the study on-ramps during the peak hours, and therefore, project's impact on the on-ramps are not significant.

TABLE 21
PROJECT IMPACTS AT FREEWAY ON-RAMPS

On-Ramp	Peak Hour	Project Trips	Impact Threshold	Storage Length, ft.	Storage Length Greater than Observed Queue Yes/No	Significant Impact Yes/No
I-10 WB On-Ramp from Brockway Ave/Santa Anita Ave	AM	124	10	560	Yes	No
	PM	141	10		Yes	No
I-10 EB On-Ramp from Asher St/Santa Anita Ave	AM	79	10	615	Yes	No
	PM	92	10		Yes	No
I-10 WB On-Ramp from Peck Road	AM	31	10	640	Yes	No
	PM	34	10		Yes	No
I-10 EB On-Ramp from Valley Boulevard	AM	62	10	590	Yes	No
	PM	71	10		Yes	No

Freeway Segment Analysis

Freeway segment analysis was conducted per the *Caltrans' Guide for Preparations of Traffic Studies*, December 2002.

The following 8 freeway segments of I-10 Freeway in the study area (from west of I-10 eastbound Off-Ramp to Santa Anita Avenue, to east of I-10 westbound Off-Ramp to Valley Boulevard West) were analyzed:

- W/O EB Off-Ramp to Santa Anita
- Santa Anita Off to Santa Anita On
- Santa Anita EB On to SB Peck Off
- EB Off (Peck SB) to EB Off (Peck NB)
- Peck NB Off to Valley EB On
- Valley WB On to Valley EB On
- Valley EB on to Valley WB Off
- E/O WB Off-Ramp to Valley WB

Freeway Segment Analysis Methodology

Caltrans requires the use of HCM methodology to analyze the operation of freeway segments. 2010 HCM analysis methodology describes the operation of freeway segment components using a range of level of service from LOS A to LOS F based on corresponding density, in terms of passenger cars/mile/lane, as shown in **Table 22.**

Figure 19 is an exhibit provided in HCM (as Exhibit 23-2) that shows the relationship between LOS and density with vehicle flow rate (in terms of passenger cars/hour/lane) for freeway segment. This exhibit has been used to determine freewaysSegment density from observed flow rate.

Freeway Segment Thresholds of Significance

Caltrans' target for I-10 operation within the study area is LOS D or better. Caltrans has identified the following threshold of significance at freeway segments in the study area:

- A significant project impact occurs at a freeway segment when project generated peak hour trips causes the peak hour level of service of the study segment to change from an acceptable operation (LOS D or better) to a deficient operation (LOS E or worse); and
- The project adds at least 50 Project-generated peak hour trips to the study freeway segment.

TABLE 22
LEVELS OF SERVICE AND DENSITY RANGES FOR STATE HIGHWAY FACILTIES

LOS	Freeway Segments Density (pc/mi/ln)	Merge/Diverge Areas Density (pc/mi/ln)	Weaving Segments Density (pc/mi/ln)
A	0 - 11	<10	<10
B	11.01 < 18	10.01 < 20	10.01 < 20
C	18.01 < 26	20.01 < 28	20.01 < 28
D	26.01 < 35	28.01 < 35	28.01 < 35
E	35.01 < 45	> 35	35.00 < 43
F	> 45	Demand Exceeds Capacity	> 43

Source: 2010 Highway Capacity Manual (HCM)

FIGURE 19: FREEWAY SEGMENT LOS, DENSITY AND FLOW RATE

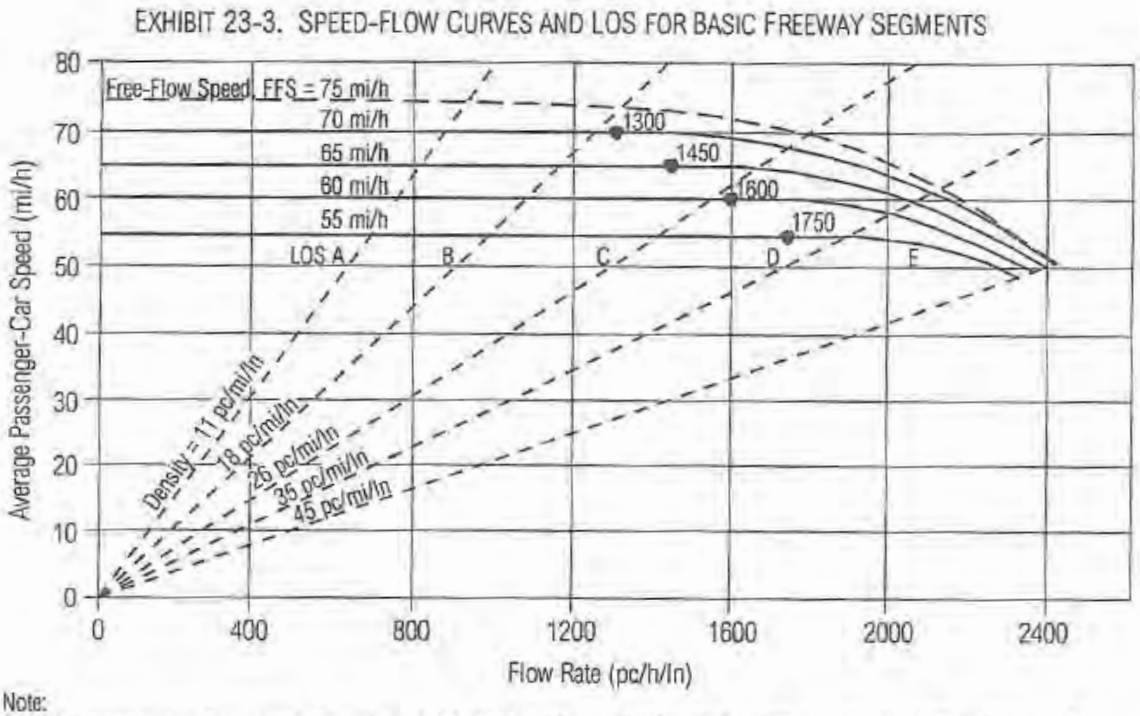

Note:
Capacity varies by free-flow speed. Capacity is 2400, 2350, 2300, and 2250 pc/h/ln at free-flow speeds of 70 and greater, 65, 60, and 55 mi/h, respectively.

For $70 < FFS \leq 75$

$(3400 - 30FFS) < v_p \leq 2400$

$$S = FFS - \left[\left(FFS - \frac{160}{3}\right)\left(\frac{v_p + 30FFS - 3400}{30FFS - 1000}\right)^{2.6}\right]$$

For $55 \leq FFS \leq 70$ and for flow rate (v_p)

$(3400 - 30FFS) < v_p \leq (1700 + 10FFS)$,

$$S = FFS - \left[\frac{1}{9}(7FFS - 340)\left(\frac{v_p + 30FFS - 3400}{40FFS - 1700}\right)^{2.6}\right]$$

For $55 \leq FFS \leq 75$ and

$v_p \leq (3400 - 30FFS)$,

$S = FFS$

Source: 2010 Highway Capacity Manual (HCM)

Existing Conditions on Freeway Segments

Existing (2014) freeway volumes were obtained from the Caltrans' Traffic Branch, located at the web address – http://traffic-counts.dot.ca.gov/

Segment peak-hour volumes on the I-10 between Valley Boulevard/Peck Road interchanges and Santa Anita Avenue interchanges were obtained from Caltrans' 2014 Traffic Volumes Book.

Peak-hour directional splits were obtained from the 2014 Peak Volume Data percentages provided on the website. Ramp volumes were obtained from 2014 Ramp Data provided by Caltrans. Truck traffic percentages were obtained from 2014 Truck Volumes provided by Caltrans

Table 23 shows detailed freeway segment and ramp volumes and other data, adjustment factors, assumptions and calculations for flow rates for both eastbound and westbound segments of I-10 Freeway in the study area.

Table 24 shows the 2016 AM and PM peak hour flow rates, density and LOS on the study freeway segments. As shown on **Table 24**, freeway segments are operating acceptably (i.e., at LOS D or better) based on the demand-density relationship under existing conditions. However, field observations indicate that, due to constrained capacity (fewer lanes) west of the Temple City Boulevard, there are occasions when queues build up in the westbound direction during the AM peak hour and this queue-build-up affects operations within the study segment. Likewise, field observations indicate that, due to constrained capacity (fewer lanes) east of Valley Boulevard, there are occasions when queues build up in the eastbound direction during the PM peak hour and this queue-build-up affects operations in the study segments.

Project-Related Impacts on Freeway Segments

Table 24 also shows the number of AM and PM peak-hour trips that will be added from the Project to the freeway segments studied in the area. The Project will add more than 50 peak-hour trips to most freeway segment. However, the threshold of impact as defined by Caltrans will not be exceeded (i.e. the project trips will not cause an existing acceptable LOS C or D operation on any segment to worsen to a deficient LOS E or F). Therefore, there will be no Project-related impacts on any freeway segments in the study area.

TABLE 23
CALTRANS FREEWAY SEGMENT VOLUME AND FLOW RATE CALCULATIONS

Segment/Ramp	Type	2014 Daily Volume (AADT) and Peak Hour Volume (AM and PM)									2016 Flow Rate, v_p (pc/hr/ln)			
		AADT	AM Peak Hour				PM Peak Hour				Eastbound		Westbound	
			AM %	PDV%	AM WB	AM EB	PM %	PDV%	PM EB	PM WB	AM EB	PM EB	AM WB	PM WB
W/O EB Off-Ramp to Santa Anita	Basic	221,000	6.8%	60.04%	9,023	6,005	6.1%	57.73%	7,783	5,698	1,305	1,691	1,960	1,238
EB Off to Santa Anita	Ramp	8,770	6.8%			596	6.1%		535		130	116		
WB On from Santa Anita	Ramp	12,911	6.8%		878		6.1%			788			191	171
Santa Anita Off to Santa Anita On	Basic	199,319	6.8%	60.04%	8,138	5,416	6.1%	57.73%	7,019	5,139	1,177	1,525	1,768	1,117
EB On from Santa Anita	Ramp	8,534	6.8%			580	6.1%		521		126	113		
WB Off to Santa Anita	Ramp	10,601	6.8%		721		6.1%			647			157	140
Santa Anita EB On to SB Peck Off	Basic	218,000	6.8%	60.04%	8,900	5,924	6.1%	57.73%	7,677	5,621	1,287	1,668	1,934	1,221
EB Off to Peck SB	Ramp	3,901	6.8%			265	6.1%		238		58	52		
EB Off (Peck SB) to EB Off (Peck NB)	Basic	207,503	6.8%	60.04%	8,472	5,638	6.1%	57.73%	7,307	5,350	1,225	1,588	1,841	1,162
EB Off to NB Peck	Ramp	8,191	6.8%			557	6.1%		500		121	109		
WB Off to SB Peck	Ramp	1,885	6.8%		128		6.1%			115			28	25
WB On from SB Peck	Ramp	6,596	6.8%		449		6.1%			402			97	87
Peck NB Off to Valley EB On	Basic	209,388	6.8%	60.04%	8,549	5,690	6.1%	57.73%	7,374	5,399	1,236	1,602	1,857	1,173
WB On from Valley WB	Ramp	4,888	6.8%		332		6.1%			298			72	65
WB Off to Valley WB	Ramp	1,954	6.8%		133		6.1%			119			29	26
EB On from Valley EB	Ramp	3,991	6.8%			271	6.1%		243		59	53		
Valley WB On to Valley EB On	Basic	204,500	6.8%	60.04%	8,349	5,557	6.1%	57.73%	7,202	5,273	1,207	1,565	1,814	1,146
Valley EB on to Valley WB Off	Basic	208,491	6.8%	60.04%	8,512	5,665	6.1%	57.73%	7,342	5,376	1,231	1,595	1,849	1,168
E/O WB Off-Ramp to Valley WB	Basic	211,000	6.8%	60.04%	8,615	5,733	6.1%	57.73%	7,430	5,441	1,246	1,614	1,872	1,182

(See Notes and Assumptions for calculations on the next page)

TABLE 23
CALTRANS FREEWAY SEGMENT VOLUME AND FLOW RATE CALCULATIONS (Contd)

Notes and Assumptions:

Peak Hour Factor, PHF =	0.95	(for urban areas)
Number of Lanes, N =	5	
Truck %, P_T =	3.08%	(from Caltrans 2014 Truck Volumes book)
Pas. Car Eq. of Trucks, E_T =	1.5	(for level terrain)
Heavy Vehicle Adj. Factor, f_{HV} =	0.985	
Driver Population Adj. Factor, fp =	1.00	(for familiar commuter traffic)
Base Free-Flow Speed, BFFS =	70	mi/hr (for urban area)
Lane Width Adj. Factor, f_{LW} =	0.0	(for 12' wide lane)
Lateral Clearance Adj. Factor, f_{LC} =	0.0	(for 6' right shoulder width)
No. of Lanes Adj. Factor, f_N =	0.0	(for 5 lanes)
Interchange Density Adj. Fac, f_{LD} =	7.5	(for 2 interchanges per mile)
Free-Flow Speed, FFS =	62.5	mi/hr

PDV% = Peak Direction Volume as % of Total Peak Hour Volume

Peak Direction = WB for AM and EB for PM Peak Hour

Source: Caltrans' 2014 Traffic Volumes Book

TABLE 24
CALTRANS MAINLINE LEVELS OF SERVICE AND PROJECT-RELATED IMPACTS

I-10 Freeway Segment	Dir	No. of Lanes	AM Peak Hour						PM Peak Hour					
			2014	2016			Project Trips		2014	2016			Project Trips	
			Volume (veh/hr)	Flow Rate (pc/hr/ln)	Density (pc/mi/ln)	LOS	Volume (veh/hr)	Impact Yes/No	Volume (veh/hr)	Flow Rate (pc/hr/ln)	Density (pc/mi/ln)	LOS	Volume (veh/hr)	Impact Yes/No
W/O EB Off-Ramp to Santa Anita	EB	5	6,005	1,305	22	C	81	No	7,783	1,691	28	D	270	No
	WB	5	9,023	1,960	34	D	155	No	5,698	1,238	21	C	175	No
Santa Anita Off to Santa Anita On	EB	5	5,416	1,177	19	C	30	No	7,019	1,525	24	C	34	No
	WB	5	8,138	1,768	30	D	31	No	5,139	1,117	16	B	34	No
Santa Anita EB On to SB Peck Off	EB	5	5,924	1,287	22	C	97	No	7,677	1,668	27	D	150	No
	WB	5	8,900	1,934	33	D	70	No	5,621	1,221	21	C	169	No
EB Off (Peck SB) to EB Off (Peck NB)	EB	5	5,638	1,225	21	C	89	No	7,307	1,588	26	C	124	No
	WB	5	8,472	1,841	32	D	39	No	5,350	1,162	17	B	135	No
Peck NB Off to Valley EB On	EB	5	5,690	1,236	21	C	79	No	7,374	1,602	26	C	92	No
	WB	5	8,549	1,857	32	D	39	No	5,399	1,173	17	B	135	No
Valley WB On to Valley EB On	EB	5	5,557	1,207	20	C	141	No	7,202	1,565	25	C	163	No
	WB	5	8,349	1,814	32	D	39	No	5,273	1,146	17	B	135	No
Valley EB on to Valley WB Off	EB	5	5,665	1,231	21	C	141	No	7,342	1,595	26	C	163	No
	WB	5	8,512	1,849	32	D	39	No	5,376	1,168	17	B	135	No
E/O WB Off-Ramp to Valley WB	EB	5	5,733	1,246	21	C	141	No	7,430	1,614	26	C	163	No
	WB	5	8,615	1,872	32	D	80	No	5,441	1,182	18	B	273	No

Notes

See Table 21 for Volume (veh/hr) and Flow Rate (pc/hr/ln) Calculations.

Density (pc/mi/ln) was determined using HCM Exhibit 23-3 as shown in Figure 19.

LOS was determined using Table 20.

TECHNICAL APPENDIX

EXISTING ROADWAY TRAFFIC COUNTS

CITY TRAFFIC COUNTERS
_626.991.7522_
www.ctcounters.com

Valley Blvd
Bt Santa Anita & Tyler

Start	13-May-14	East		Hour Totals		West		Hour Totals		Combined Totals	
Time	Tue	Morning	Afternoon	Morning	Afternoon	Morning	Afternoon	Morning	Afternoon	Morning	Afternoon
12:00		21	132			12	142				
12:15		10	135			10	165				
12:30		11	119			10	145				
12:45		19	124	61	510	7	164	39	616	100	1126
01:00		8	129			15	136				
01:15		8	127			10	148				
01:30		4	140			2	153				
01:45		6	149	26	545	5	137	32	574	58	1119
02:00		9	160			7	146				
02:15		2	205			5	142				
02:30		3	162			7	151				
02:45		3	161	17	688	5	161	24	600	41	1288
03:00		2	181			7	140				
03:15		5	182			4	144				
03:30		9	170			7	175				
03:45		9	183	25	716	12	161	30	620	55	1336
04:00		11	189			7	158				
04:15		13	208			15	151				
04:30		16	213			17	185				
04:45		22	219	62	829	21	151	60	645	122	1474
05:00		18	208			37	169				
05:15		23	194			53	173				
05:30		33	183			59	173				
05:45		54	185	128	770	78	157	227	672	355	1442
06:00		39	162			66	130				
06:15		31	148			104	142				
06:30		63	155			152	144				
06:45		78	128	211	593	140	119	462	535	673	1128
07:00		72	123			147	125				
07:15		96	130			208	114				
07:30		120	120			210	105				
07:45		136	89	424	462	225	99	790	443	1214	905
08:00		118	102			223	74				
08:15		124	76			202	100				
08:30		106	77			199	66				
08:45		112	78	460	333	191	70	815	310	1275	643
09:00		95	76			160	57				
09:15		125	82			171	61				
09:30		140	67			151	63				
09:45		116	81	476	306	153	54	635	235	1111	541
10:00		108	48			158	61				
10:15		114	45			133	47				
10:30		129	32			136	27				
10:45		117	33	468	158	149	31	576	166	1044	324
11:00		129	39			117	20				
11:15		140	13			135	27				
11:30		110	30			122	16				
11:45		133	25	512	107	140	15	514	78	1026	185
Total		2870	6017			4204	5494			7074	11511
Percent		32.3%	67.7%			43.3%	56.7%			38.1%	61.9%
Grand Total		2870	6017			4204	5494			7074	11511
Percent		32.3%	67.7%			43.3%	56.7%			38.1%	61.9%

ADT ADT 18,585 AADT 18,585

CITY TRAFFIC COUNTERS
_626.991.7522_
www.ctcounters.com

Santa Anita Ave
Bt Valley & Ramona

Start	13-May-14	South		Hour Totals		North		Hour Totals		Combined Totals	
Time	Tue	Morning	Afternoon	Morning	Afternoon	Morning	Afternoon	Morning	Afternoon	Morning	Afternoon
12:00		38	194			42	232				
12:15		33	246			24	230				
12:30		35	234			37	266				
12:45		27	225	133	899	37	211	140	939	273	1838
01:00		29	234			25	204				
01:15		21	196			22	239				
01:30		17	217			28	237				
01:45		18	242	85	889	18	230	93	910	178	1799
02:00		24	208			22	243				
02:15		26	238			14	237				
02:30		14	217			16	273				
02:45		20	270	84	933	12	236	64	989	148	1922
03:00		12	201			7	295				
03:15		14	265			7	277				
03:30		12	223			13	282				
03:45		21	218	59	907	22	305	49	1159	108	2066
04:00		24	228			23	299				
04:15		27	217			22	301				
04:30		38	220			38	303				
04:45		57	276	146	941	41	334	124	1237	270	2178
05:00		39	245			48	340				
05:15		94	272			54	339				
05:30		126	253			79	345				
05:45		129	274	388	1044	89	360	270	1384	658	2428
06:00		167	235			91	321				
06:15		163	228			101	306				
06:30		221	222			161	316				
06:45		226	156	777	841	155	332	508	1275	1285	2116
07:00		304	202			130	261				
07:15		299	174			265	243				
07:30		321	188			255	242				
07:45		352	175	1276	739	215	220	865	966	2141	1705
08:00		338	180			248	197				
08:15		329	139			233	182				
08:30		339	169			225	171				
08:45		325	168	1331	656	221	179	927	729	2258	1385
09:00		278	147			193	182				
09:15		298	141			234	135				
09:30		264	126			236	129				
09:45		240	131	1080	545	205	142	868	588	1948	1133
10:00		260	126			210	131				
10:15		231	112			224	109				
10:30		236	89			210	112				
10:45		232	80	959	407	200	112	844	464	1803	871
11:00		225	65			225	83				
11:15		230	71			248	55				
11:30		244	46			242	45				
11:45		230	50	929	232	254	55	969	238	1898	470
Total		7247	9033			5721	10878			12968	19911
Percent		44.5%	55.5%			34.5%	65.5%			39.4%	60.6%
Grand Total		7247	9033			5721	10878			12968	19911
Percent		44.5%	55.5%			34.5%	65.5%			39.4%	60.6%

ADT ADT 32,879 AADT 32,879

CITY TRAFFIC COUNTERS
_626.991.7522_
www.ctcounters.com

Ramona Blvd
Bt Tyler & Valley

Start	13-May-14	East		Hour Totals		West		Hour Totals		Combined Totals	
Time	Tue	Morning	Afternoon	Morning	Afternoon	Morning	Afternoon	Morning	Afternoon	Morning	Afternoon
12:00		11	97			3	79				
12:15		11	82			7	72				
12:30		4	95			3	87				
12:45		8	68	34	342	9	93	22	331	56	673
01:00		4	77			3	70				
01:15		3	88			3	96				
01:30		6	73			0	85				
01:45		1	71	14	309	1	63	7	314	21	623
02:00		1	68			2	77				
02:15		4	79			2	62				
02:30		4	84			1	84				
02:45		3	89	12	320	3	77	8	300	20	620
03:00		0	127			2	77				
03:15		3	100			3	86				
03:30		1	110			7	83				
03:45		4	93	8	430	5	80	17	326	25	756
04:00		3	107			14	76				
04:15		2	114			8	73				
04:30		1	119			12	69				
04:45		7	138	13	478	12	91	46	309	59	787
05:00		7	114			16	95				
05:15		10	125			18	71				
05:30		16	112			28	97				
05:45		12	146	45	497	30	74	92	337	137	834
06:00		14	137			36	79				
06:15		27	125			39	76				
06:30		26	119			52	58				
06:45		21	108	88	489	64	70	191	283	279	772
07:00		45	97			57	58				
07:15		39	93			86	56				
07:30		44	80			79	61				
07:45		54	90	182	360	108	50	330	225	512	585
08:00		113	70			114	50				
08:15		132	60			134	46				
08:30		78	67			126	40				
08:45		61	60	384	257	87	45	461	181	845	438
09:00		73	61			87	49				
09:15		76	72			80	34				
09:30		67	49			84	44				
09:45		72	43	288	225	86	33	337	160	625	385
10:00		73	30			68	31				
10:15		58	23			75	17				
10:30		78	21			66	18				
10:45		72	21	281	95	82	7	291	73	572	168
11:00		77	10			75	9				
11:15		74	13			74	13				
11:30		79	19			79	12				
11:45		72	13	302	55	67	8	295	42	597	97
Total		1651	3857			2097	2881			3748	6738
Percent		30.0%	70.0%			42.1%	57.9%			35.7%	64.3%
Grand Total		1651	3857			2097	2881			3748	6738
Percent		30.0%	70.0%			42.1%	57.9%			35.7%	64.3%
ADT		ADT 10,486		AADT 10,486							

CITY TRAFFIC COUNTERS
_626.991.7522_
www.ctcounters.com

Tyler Ave
Bt Valley & Ramona

Start	13-May-14	North		Hour Totals		South		Hour Totals		Combined Totals	
Time	Tue	Morning	Afternoon	Morning	Afternoon	Morning	Afternoon	Morning	Afternoon	Morning	Afternoon
12:00		2	77			4	74				
12:15		6	82			7	68				
12:30		2	84			1	73				
12:45		3	80	13	323	0	66	12	281	25	604
01:00		2	89			2	54				
01:15		5	69			1	35				
01:30		2	50			0	54				
01:45		0	71	9	279	1	62	4	205	13	484
02:00		2	84			0	48				
02:15		3	87			1	75				
02:30		1	73			0	58				
02:45		2	96	8	340	0	85	1	266	9	606
03:00		0	96			0	73				
03:15		0	109			1	59				
03:30		0	112			0	75				
03:45		1	110	1	427	2	59	3	266	4	693
04:00		2	102			2	75				
04:15		1	105			6	67				
04:30		7	122			8	72				
04:45		8	96	18	425	5	64	21	278	39	703
05:00		6	133			12	103				
05:15		7	117			12	82				
05:30		10	150			17	78				
05:45		17	164	40	564	22	77	63	340	103	904
06:00		21	133			25	89				
06:15		23	90			22	79				
06:30		23	88			41	58				
06:45		41	96	108	407	30	72	118	298	226	705
07:00		31	86			62	52				
07:15		59	70			82	48				
07:30		77	53			101	61				
07:45		76	39	243	248	112	47	357	208	600	456
08:00		74	61			93	42				
08:15		78	43			68	18				
08:30		64	47			72	24				
08:45		58	28	274	179	62	24	295	108	569	287
09:00		61	50			64	26				
09:15		61	33			69	17				
09:30		63	28			47	20				
09:45		71	25	256	136	102	20	282	83	538	219
10:00		78	18			116	13				
10:15		77	23			53	8				
10:30		59	18			53	16				
10:45		56	11	270	70	58	7	280	44	550	114
11:00		79	9			64	11				
11:15		79	14			63	12				
11:30		61	7			55	4				
11:45		72	3	291	33	59	7	241	34	532	67
Total		1531	3431			1677	2411			3208	5842
Percent		30.9%	69.1%			41.0%	59.0%			35.4%	64.6%
Grand Total		1531	3431			1677	2411			3208	5842
Percent		30.9%	69.1%			41.0%	59.0%			35.4%	64.6%
ADT		ADT 9,050		AADT 9,050							

INTERSECTION TRAFFIC COUNT DATA

EXTRACTED FROM VARIOUS TRAFFIC STUDIES

INTERSECTION LEVEL OF SERVICE ANALYSIS

EXISTING 2016 LEVEL OF SERVICE ANALYSIS

INTERSECTION CAPACITY UTILIZATION ANALYSIS

Location: Santa Anita Avenue and Valley Boulevard **City:** El Monte
Project No.: EBA2014-07 **Analyzed By:** MYR **File Name:** 2014-07-01 1

Problem Condition: Existing 2016 Traffic Conditions
Existing Geometric Configuration

Movement	Available Lanes		Peak Hour Volumes								Movement V/C Per Lane		Critical V/C	
			Existing		Other Proj.		Project		Study Vol.					
	No.	Cap.	AM	PM	AM	PM	AM	PM	AM	PM	AM	PM	AM	PM
N/B Left	2.0	2880	495	411	0	0	0	0	495	411	0.172	0.143	0.172	0.143
N/B Thru	3.0	4800	580	1058	0	0	0	0	580	1058	0.129	0.236		
N/B Right	0.0	0	41	76	0	0	0	0	41	76	0.000	0.000		
S/B Left	1.0	1600	62	60	0	0	0	0	62	60	0.039	0.037		
S/B Thru	3.0	4800	877	648	0	0	0	0	877	648	0.256	0.164	0.256	0.164
S/B Right	0.0	0	353	137	0	0	0	0	353	137	0.000	0.000		
E/B Left	1.0	1600	88	222	0	0	0	0	88	222	0.055	0.139	0.055	0.139
E/B Thru	2.0	3200	478	705	0	0	0	0	478	705	0.152	0.222		
E/B Right	0.0	0	8	5	0	0	0	0	8	5	0.000	0.000		
W/B Left	2.0	2880	33	104	0	0	0	0	33	104	0.011	0.036		
W/B Thru	2.0	3200	1009	483	0	0	0	0	1009	483	0.323	0.168	0.323	0.168
W/B Right	0.0	0	25	56	0	0	0	0	25	56	0.000	0.000		
	ANALYSIS RESULTS :								Sum Of Critical V/C:				0.806	0.613
									Lost Time:				0.100	0.100
									Total V/C:				0.906	0.713
									Level Of Service:				E	C

ASSUMPTIONS AND METHODOLOGY

Existing Conditions Year: 2016
Study Volume Year: 2016
Annual Growth Factor: 0.82 Percent

Lane Capacity
Single Through Lane = 1600 Vehicles Per Hour
Single Turn Lane = 1600 Vehicles Per Hour
Dual Turn Lane = 2880 Vehicles Per Hour

Level Of Service Definition

Total V/C	LOS
Under 0.605	A
0.605 - 0.704	B
0.705 - 0.804	C
0.805 - 0.904	D
0.905 - 1.004	E
Over 1.005	F

Lost time for signal Yellow and All red intervals: 0.10 of V/C Ratio

NOTES:

EVAN BROOKS ASSOCIATES, PASADENA, CALIFORNIA

INTERSECTION CAPACITY UTILIZATION ANALYSIS

Location: Santa Anita Avenue and Ramona Boulevard **City:** El Monte
Project No.: EBA2014-07 **Analyzed By:** MYR **File Name:** 2014-07-02 1

Problem Condition: Existing 2016 Traffic Conditions
Existing Geometric Configuration

Movement	Available Lanes		Peak Hour Volumes								Movement V/C Per Lane		Critical V/C	
			Existing		Other Proj.		Project		Study Vol.					
	No.	Cap.	AM	PM	AM	PM	AM	PM	AM	PM	AM	PM	AM	PM
N/B Left	1.0	1600	44	41	0	0	0	0	44	41	0.028	0.026		
N/B Thru	3.0	4800	963	1438	0	0	0	0	963	1438	0.249	0.349	0.249	0.349
N/B Right	0.0	0	231	238	0	0	0	0	231	238	0.000	0.000		
S/B Left	1.0	1600	73	82	0	0	0	0	73	82	0.046	0.051	0.046	0.051
S/B Thru	3.0	4800	1257	1000	0	0	0	0	1257	1000	0.267	0.215		
S/B Right	0.0	0	23	33	0	0	0	0	23	33	0.000	0.000		
E/B Left	1.0	1600	25	50	0	0	0	0	25	50	0.015	0.031	0.015	0.031
E/B Thru	2.0	3200	26	54	0	0	0	0	26	54	0.024	0.033		
E/B Right	0.0	0	52	52	0	0	0	0	52	52	0.000	0.000		
W/B Left	2.0	2880	203	138	0	0	0	0	203	138	0.070	0.048		
W/B Thru	1.0	1600	49	26	0	0	0	0	49	26	0.094	0.055	0.094	0.055
W/B Right	0.0	0	101	62	0	0	0	0	101	62	0.000	0.000		
	ANALYSIS RESULTS :								Sum Of Critical V/C:				0.404	0.486
									Lost Time:				0.100	0.100
									Total V/C:				0.504	0.586
									Level Of Service:				A	A

ASSUMPTIONS AND METHODOLOGY

Existing Conditions Year: 2016
Study Volume Year: 2016
Annual Growth Factor: 0.82 Percent

Lane Capacity
Single Through Lane = 1600 Vehicles Per Hour
Single Turn Lane = 1600 Vehicles Per Hour
Dual Turn Lane = 2880 Vehicles Per Hour

Level Of Service Definition

Total V/C	LOS
Under 0.605	A
0.605 - 0.704	B
0.705 - 0.804	C
0.805 - 0.904	D
0.905 - 1.004	E
Over 1.005	F

Lost time for signal Yellow and All red intervals: 0.10 of V/C Ratio

NOTES:

EVAN BROOKS ASSOCIATES, PASADENA, CALIFORNIA

INTERSECTION CAPACITY UTILIZATION ANALYSIS

Location: Santa Anita Avenue and Brockway Street/!-10 Ramps **City:** El Monte
Project No.: EBA2014-07 **Analyzed By:** MYR **File Name:** 2014-07-03 1

Problem Condition: Existing 2016 Traffic Conditions
Existing Geometric Configuration

Movement	Available Lanes		Peak Hour Volumes								Movement V/C Per Lane		Critical V/C	
			Existing		Other Proj.		Project		Study Vol.					
	No.	Cap.	AM	PM	AM	PM	AM	PM	AM	PM	AM	PM	AM	PM
N/B Left	1.0	1600	270	419	0	0	0	0	270	419	0.169	0.262	0.169	0.262
N/B Thru	2.0	3200	938	1436	0	0	0	0	938	1436	0.293	0.449		
N/B Right	0.0	0	0	0	0	0	0	0	0	0	0.000	0.000		
S/B Left	0.0	0	0	0	0	0	0	0	0	0	0.000	0.000		
S/B Thru	3.0	4800	1126	920	0	0	0	0	1126	920	0.235	0.192	0.235	0.192
S/B Right	1.0	1600	370	304	0	0	0	0	370	304	0.231	0.190		
E/B Left	0.0	0	0	0	0	0	0	0	0	0	0.000	0.000	0.000	0.000
E/B Thru	0.0	0	0	0	0	0	0	0	0	0	0.000	0.000		
E/B Right	0.0	0	0	0	0	0	0	0	0	0	0.000	0.000		
W/B Left	2.0	2880	459	297	0	0	0	0	459	297	0.159	0.103		
W/B Thru	1.0	1600	209	152	0	0	0	0	209	152	0.356	0.264	0.356	0.264
W/B Right	0.0	0	362	271	0	0	0	0	362	271	0.000	0.000		
	ANALYSIS RESULTS :								Sum Of Critical V/C:				0.760	0.718
									Lost Time:				0.100	0.100
									Total V/C:				0.860	0.818
									Level Of Service:				D	D

ASSUMPTIONS AND METHODOLOGY

Existing Conditions Year: 2016
Study Volume Year: 2016
Annual Growth Factor: 0.82 Percent

Lane Capacity
Single Through Lane = 1600 Vehicles Per Hour
Single Turn Lane = 1600 Vehicles Per Hour
Dual Turn Lane = 2880 Vehicles Per Hour

Level Of Service Definition

Total V/C	LOS
Under 0.605	A
0.605 - 0.704	B
0.705 - 0.804	C
0.805 - 0.904	D
0.905 - 1.004	E
Over 1.005	F

Lost time for signal Yellow and All red intervals: 0.10 of V/C Ratio

NOTES:

EVAN BROOKS ASSOCIATES, PASADENA, CALIFORNIA

INTERSECTION CAPACITY UTILIZATION ANALYSIS

Location: Santa Anita Avenue and Asher Street/!-10 EB Ramps **City:** El Monte
Project No.: EBA2014-07 **Analyzed By:** MYR **File Name:** 2014-07-04 1

Problem Condition: Existing 2016 Traffic Conditions
Existing Geometric Configuration

Movement	Available Lanes		Peak Hour Volumes								Movement V/C Per Lane		Critical V/C	
			Existing		Other Proj.		Project		Study Vol.					
	No.	Cap.	AM	PM	AM	PM	AM	PM	AM	PM	AM	PM	AM	PM
N/B Left	0.0	0	0	0	0	0	0	0	0	0	0.000	0.000		
N/B Thru	3.5	5600	778	1252	0	0	0	0	778	1252	0.139	0.224		
N/B Right	0.5	800	305	180	0	0	0	0	305	180	0.381	0.225	0.381	0.225
S/B Left	1.0	1600	323	272	0	0	0	0	323	272	0.202	0.170	0.202	0.170
S/B Thru	2.0	3200	1242	1025	0	0	0	0	1242	1025	0.388	0.320		
S/B Right	0.0	0	0	0	0	0	0	0	0	0	0.000	0.000		
E/B Left	1.5	2400	390	617	0	0	0	0	390	617	0.162	0.257		
E/B Thru	0.5	0	97	148	0	0	0	0	97	148	0.000	0.000		
E/B Right	1.0	1600	385	449	0	0	0	0	385	449	0.241	0.281	0.241	0.281
W/B Left	0.0	0	0	0	0	0	0	0	0	0	0.000	0.000	0.000	0.000
W/B Thru	0.0	0	0	0	0	0	0	0	0	0	0.000	0.000		
W/B Right	0.0	0	0	0	0	0	0	0	0	0	0.000	0.000		
	ANALYSIS RESULTS :								Sum Of Critical V/C:				0.824	0.675
									Lost Time:				0.100	0.100
									Total V/C:				0.924	0.775
									Level Of Service:				E	C

ASSUMPTIONS AND METHODOLOGY

Existing Conditions Year: 2016
Study Volume Year: 2016
Annual Growth Factor: 0.82 Percent

Lane Capacity
Single Through Lane = 1600 Vehicles Per Hour
Single Turn Lane = 1600 Vehicles Per Hour
Dual Turn Lane = 2880 Vehicles Per Hour

Level Of Service Definition

Total V/C	LOS
Under 0.605	A
0.605 - 0.704	B
0.705 - 0.804	C
0.805 - 0.904	D
0.905 - 1.004	E
Over 1.005	F

Lost time for signal Yellow and All red intervals: 0.10 of V/C Ratio

NOTES:

EVAN BROOKS ASSOCIATES, PASADENA, CALIFORNIA

INTERSECTION CAPACITY UTILIZATION ANALYSIS

Location: Tyler Avenue and Valley Boulevard **City:** El Monte
Project No.: EBA2014-07 **Analyzed By:** MYR **File Name:** 2014-07-05 1

Problem Condition: Existing 2016 Traffic Conditions
Existing Geometric Configuration

Movement	Available Lanes		Peak Hour Volumes								Movement V/C Per Lane		Critical V/C	
			Existing		Other Proj.		Project		Study Vol.					
	No.	Cap.	AM	PM	AM	PM	AM	PM	AM	PM	AM	PM	AM	PM
N/B Left	1.0	1600	86	126	0	0	0	0	86	126	0.054	0.079	0.054	0.079
N/B Thru	2.0	3200	189	214	0	0	0	0	189	214	0.071	0.091		
N/B Right	0.0	0	39	76	0	0	0	0	39	76	0.000	0.000		
S/B Left	1.0	1600	146	98	0	0	0	0	146	98	0.091	0.061		
S/B Thru	2.0	3200	305	295	0	0	0	0	305	295	0.133	0.117	0.133	0.117
S/B Right	0.0	0	122	80	0	0	0	0	122	80	0.000	0.000		
E/B Left	1.0	1600	43	57	0	0	0	0	43	57	0.027	0.036	0.027	0.036
E/B Thru	2.0	3200	468	512	0	0	0	0	468	512	0.163	0.199		
E/B Right	0.0	0	53	123	0	0	0	0	53	123	0.000	0.000		
W/B Left	1.0	1600	29	123	0	0	0	0	29	123	0.018	0.077		
W/B Thru	2.0	3200	955	861	0	0	0	0	955	861	0.338	0.291	0.338	0.291
W/B Right	0.0	0	128	70	0	0	0	0	128	70	0.000	0.000		
	ANALYSIS RESULTS :								Sum Of Critical V/C:				0.552	0.522
									Lost Time:				0.100	0.100
									Total V/C:				0.652	0.622
									Level Of Service:				B	B

ASSUMPTIONS AND METHODOLOGY

Existing Conditions Year: 2016
Study Volume Year: 2016
Annual Growth Factor: 0.82 Percent

Lane Capacity
Single Through Lane = 1600 Vehicles Per Hour
Single Turn Lane = 1600 Vehicles Per Hour
Dual Turn Lane = 2880 Vehicles Per Hour

Level Of Service Definition

Total V/C	LOS
Under 0.605	A
0.605 - 0.704	B
0.705 - 0.804	C
0.805 - 0.904	D
0.905 - 1.004	E
Over 1.005	F

Lost time for signal Yellow and All red intervals: 0.10 of V/C Ratio

NOTES:

EVAN BROOKS ASSOCIATES, PASADENA, CALIFORNIA

INTERSECTION CAPACITY UTILIZATION ANALYSIS

Location: Tyler Avenue and Ramona Boulevard **City:** El Monte
Project No.: EBA2014-07 **Analyzed By:** MYR **File Name:** 2014-07-06 1

Problem Condition: Existing 2016 Traffic Conditions
Existing Geometric Configuration

Movement	Available Lanes		Peak Hour Volumes								Movement V/C Per Lane		Critical V/C	
			Existing		Other Proj.		Project		Study Vol.					
	No.	Cap.	AM	PM	AM	PM	AM	PM	AM	PM	AM	PM	AM	PM
N/B Left	1.0	1600	61	27	0	0	0	0	61	27	0.038	0.017	0.038	
N/B Thru	2.0	3200	186	365	0	0	0	0	186	365	0.089	0.167		0.167
N/B Right	0.0	0	98	170	0	0	0	0	98	170	0.000	0.000		
S/B Left	1.0	1600	56	37	0	0	0	0	56	37	0.035	0.023		0.023
S/B Thru	1.0	1600	214	262	0	0	0	0	214	262	0.134	0.163	0.134	
S/B Right	1.0	1600	98	92	0	0	0	0	98	92	0.028	0.058		
E/B Left	1.0	1600	54	93	0	0	0	0	54	93	0.033	0.058	0.033	
E/B Thru	2.0	3200	225	580	0	0	0	0	225	580	0.079	0.198		0.198
E/B Right	0.0	0	27	53	0	0	0	0	27	53	0.000	0.000		
W/B Left	1.0	1600	75	111	0	0	0	0	75	111	0.047	0.070		0.070
W/B Thru	2.0	3200	482	330	0	0	0	0	482	330	0.165	0.120	0.165	
W/B Right	0.0	0	45	56	0	0	0	0	45	56	0.000	0.000		
	ANALYSIS RESULTS :								Sum Of Critical V/C:				0.370	0.458
									Lost Time:				0.100	0.100
									Total V/C:				0.470	0.558
									Level Of Service:				A	A

ASSUMPTIONS AND METHODOLOGY

Existing Conditions Year: 2016
Study Volume Year: 2016
Annual Growth Factor: 0.82 Percent

Lane Capacity
Single Through Lane = 1600 Vehicles Per Hour
Single Turn Lane = 1600 Vehicles Per Hour
Dual Turn Lane = 2880 Vehicles Per Hour

Level Of Service Definition

Total V/C	LOS
Under 0.605	A
0.605 - 0.704	B
0.705 - 0.804	C
0.805 - 0.904	D
0.905 - 1.004	E
Over 1.005	F

Lost time for signal Yellow and All red intervals: 0.10 of V/C Ratio

NOTES:

EVAN BROOKS ASSOCIATES, PASADENA, CALIFORNIA

INTERSECTION CAPACITY UTILIZATION ANALYSIS

Location: Valley Boulevard and Ramona Boulevard **City:** El Monte
Project No.: EBA2014-07 **Analyzed By:** MYR **File Name:** 2014-07-07 1

Problem Condition: Existing 2016 Traffic Conditions
Existing Geometric Configuration

Movement	Available Lanes		Peak Hour Volumes								Movement V/C Per Lane		Critical V/C	
			Existing		Other Proj.		Project		Study Vol.					
	No.	Cap.	AM	PM	AM	PM	AM	PM	AM	PM	AM	PM	AM	PM
N/B Left	1.0	1600	194	200	0	0	0	0	194	200	0.121	0.125		
N/B Thru	2.0	3200	730	450	0	0	0	0	730	450	0.228	0.141	0.228	0.141
N/B Right	1.0	1600	32	58	0	0	0	0	32	58	0.020	0.015		
S/B Left	1.0	1600	172	517	0	0	0	0	172	517	0.107	0.323	0.107	0.323
S/B Thru	2.0	3200	472	750	0	0	0	0	472	750	0.148	0.234		
S/B Right	1.0	1600	10	14	0	0	0	0	10	14	0.006	0.009		
E/B Left	1.0	1600	11	21	0	0	0	0	11	21	0.007	0.013	0.007	
E/B Thru	2.0	3200	160	476	0	0	0	0	160	476	0.072	0.170		0.170
E/B Right	0.0	0	69	66	0	0	0	0	69	66	0.000	0.000		
W/B Left	1.0	1600	56	33	0	0	0	0	56	33	0.035	0.021		0.021
W/B Thru	2.0	3200	481	240	0	0	0	0	481	240	0.273	0.139	0.273	
W/B Right	0.0	0	393	204	0	0	0	0	393	204	0.000	0.000		
	ANALYSIS RESULTS :								Sum Of Critical V/C:				0.616	0.654
									Lost Time:				0.100	0.100
									Total V/C:				0.716	0.754
									Level Of Service:				C	C

ASSUMPTIONS AND METHODOLOGY

Existing Conditions Year: 2016
Study Volume Year: 2016
Annual Growth Factor: 0.82 Percent

Lane Capacity
Single Through Lane = 1600 Vehicles Per Hour
Single Turn Lane = 1600 Vehicles Per Hour
Dual Turn Lane = 2880 Vehicles Per Hour

Level Of Service Definition

Total V/C	LOS
Under 0.605	A
0.605 - 0.704	B
0.705 - 0.804	C
0.805 - 0.904	D
0.905 - 1.004	E
Over 1.005	F

Lost time for signal Yellow and All red intervals: 0.10 of V/C Ratio

NOTES:

EVAN BROOKS ASSOCIATES, PASADENA, CALIFORNIA

INTERSECTION CAPACITY UTILIZATION ANALYSIS

Location: Peck Road and Valley Boulevard **City:** El Monte
Project No.: EBA2014-07 **Analyzed By:** MYR **File Name:** 2014-07-08 1

Problem Condition: Existing 2016 Traffic Conditions
Existing Geometric Configuration

Movement	Available Lanes		Peak Hour Volumes								Movement V/C Per Lane		Critical V/C	
			Existing		Other Proj.		Project		Study Vol.					
	No.	Cap.	AM	PM	AM	PM	AM	PM	AM	PM	AM	PM	AM	PM
N/B Left	1.0	1600	207	37	0	0	0	0	207	37	0.129	0.023	0.129	
N/B Thru	3.0	4800	675	577	0	0	0	0	675	577	0.206	0.175		0.175
N/B Right	0.0	0	313	265	0	0	0	0	313	265	0.000	0.000		
S/B Left	1.0	1600	194	191	0	0	0	0	194	191	0.121	0.119		0.119
S/B Thru	2.0	3200	876	826	0	0	0	0	876	826	0.274	0.258	0.274	
S/B Right	1.0	1600	199	148	0	0	0	0	199	148	0.080	0.017		
E/B Left	1.0	1600	71	120	0	0	0	0	71	120	0.045	0.075	0.045	
E/B Thru	2.0	3200	465	1259	0	0	0	0	465	1259	0.145	0.394		0.394
E/B Right	1.0	1600	74	339	0	0	0	0	74	339	0.046	0.189		
W/B Left	1.0	1600	55	201	0	0	0	0	55	201	0.034	0.126		0.126
W/B Thru	2.0	3200	894	846	0	0	0	0	894	846	0.279	0.264	0.279	
W/B Right	1.0	1600	192	160	0	0	0	0	192	160	0.120	0.100		
	ANALYSIS RESULTS :								Sum Of Critical V/C:				0.727	0.814
									Lost Time:				0.100	0.100
									Total V/C:				0.827	0.914
									Level Of Service:				D	E

ASSUMPTIONS AND METHODOLOGY

Existing Conditions Year: 2016
Study Volume Year: 2016
Annual Growth Factor: 0.82 Percent

Lane Capacity
Single Through Lane = 1600 Vehicles Per Hour
Single Turn Lane = 1600 Vehicles Per Hour
Dual Turn Lane = 2880 Vehicles Per Hour

Level Of Service Definition

Total V/C	LOS
Under 0.605	A
0.605 - 0.704	B
0.705 - 0.804	C
0.805 - 0.904	D
0.905 - 1.004	E
Over 1.005	F

Lost time for signal Yellow and All red intervals: 0.10 of V/C Ratio

NOTES:

EVAN BROOKS ASSOCIATES, PASADENA, CALIFORNIA

INTERSECTION CAPACITY UTILIZATION ANALYSIS

Location: Santa Anita Avenue and Valley Mall **City:** El Monte
Project No.: EBA2014-07 **Analyzed By:** MYR **File Name:** 2014-07-09 1

Problem Condition: Existing 2016 Traffic Conditions
Existing Geometric Configuration

Movement	Available Lanes		Peak Hour Volumes								Movement V/C Per Lane		Critical V/C	
			Existing		Other Proj.		Project		Study Vol.					
	No.	Cap.	AM	PM	AM	PM	AM	PM	AM	PM	AM	PM	AM	PM
N/B Left	0.0	0	0	0	0	0	0	0	0	0	0.000	0.000		
N/B Thru	3.0	4800	1145	1343	0	0	0	0	1145	1343	0.245	0.298	0.245	0.298
N/B Right	0.0	0	33	89	0	0	0	0	33	89	0.000	0.000		
S/B Left	1.0	1600	33	12	0	0	0	0	33	12	0.020	0.008	0.020	0.008
S/B Thru	3.0	4800	970	706	0	0	0	0	970	706	0.202	0.147		
S/B Right	0.0	0	0	0	0	0	0	0	0	0	0.000	0.000		
E/B Left	0.0	0	2	0	0	0	0	0	2	0	0.000	0.000		
E/B Thru	1.0	1600	143	355	0	0	0	0	143	355	0.091	0.222		
E/B Right	1.0	1600	459	459	0	0	0	0	459	459	0.287	0.287	0.287	0.287
W/B Left	0.0	0	15	113	0	0	0	0	15	113	0.000	0.000	0.000	0.000
W/B Thru	1.0	1600	0	0	0	0	0	0	0	0	0.037	0.142		
W/B Right	0.0	0	45	115	0	0	0	0	45	115	0.000	0.000		
	ANALYSIS RESULTS :								Sum Of Critical V/C:				0.553	0.593
									Lost Time:				0.100	0.100
									Total V/C:				0.653	0.693
									Level Of Service:				B	B

ASSUMPTIONS AND METHODOLOGY

Existing Conditions Year: 2016
Study Volume Year: 2016
Annual Growth Factor: 0.82 Percent

Lane Capacity
Single Through Lane = 1600 Vehicles Per Hour
Single Turn Lane = 1600 Vehicles Per Hour
Dual Turn Lane = 2880 Vehicles Per Hour

Level Of Service Definition

Total V/C	LOS
Under 0.605	A
0.605 - 0.704	B
0.705 - 0.804	C
0.805 - 0.904	D
0.905 - 1.004	E
Over 1.005	F

Lost time for signal Yellow and All red intervals: 0.10 of V/C Ratio

NOTES:

EVAN BROOKS ASSOCIATES, PASADENA, CALIFORNIA

FUTURE 2020 AMBIENT LEVEL OF SERVICE ANALYSIS

INTERSECTION CAPACITY UTILIZATION ANALYSIS

Location: Santa Anita Avenue and Valley Boulevard **City:** El Monte
Project No.: EBA2014-07 **Analyzed By:** MYR **File Name:** 2014-07-01 2

Problem Condition: Future 2020 With 0.82% Annual Growth
Existing Geometric Configuration

Movement	Available Lanes		Peak Hour Volumes								Movement V/C Per Lane		Critical V/C	
			Existing		Other Proj.		Project		Study Vol.					
	No.	Cap.	AM	PM	AM	PM	AM	PM	AM	PM	AM	PM	AM	PM
N/B Left	2.0	2880	495	411	0	0	0	0	511	425	0.178	0.148	0.178	0.148
N/B Thru	3.0	4800	580	1058	0	0	0	0	599	1093	0.134	0.244		
N/B Right	0.0	0	41	76	0	0	0	0	43	79	0.000	0.000		
S/B Left	1.0	1600	62	60	0	0	0	0	64	62	0.040	0.039		
S/B Thru	3.0	4800	877	648	0	0	0	0	906	669	0.265	0.169	0.265	0.169
S/B Right	0.0	0	353	137	0	0	0	0	365	142	0.000	0.000		
E/B Left	1.0	1600	88	222	0	0	0	0	91	230	0.057	0.143	0.057	0.143
E/B Thru	2.0	3200	478	705	0	0	0	0	494	728	0.157	0.229		
E/B Right	0.0	0	8	5	0	0	0	0	9	5	0.000	0.000		
W/B Left	2.0	2880	33	104	0	0	0	0	34	108	0.012	0.037		
W/B Thru	2.0	3200	1009	483	0	0	0	0	1043	499	0.334	0.174	0.334	0.174
W/B Right	0.0	0	25	56	0	0	0	0	26	58	0.000	0.000		
	ANALYSIS RESULTS :								Sum Of Critical V/C:				0.833	0.634
									Lost Time:				0.100	0.100
									Total V/C:				0.933	0.734
									Level Of Service:				E	C

ASSUMPTIONS AND METHODOLOGY

Existing Conditions Year: 2016
Study Volume Year: 2020
Annual Growth Factor: 0.82 Percent

Lane Capacity
Single Through Lane = 1600 Vehicles Per Hour
Single Turn Lane = 1600 Vehicles Per Hour
Dual Turn Lane = 2880 Vehicles Per Hour

Level Of Service Definition

Total V/C	LOS
Under 0.605	A
0.605 - 0.704	B
0.705 - 0.804	C
0.805 - 0.904	D
0.905 - 1.004	E
Over 1.005	F

Lost time for signal Yellow and All red intervals: 0.10 of V/C Ratio

NOTES:

EVAN BROOKS ASSOCIATES, PASADENA, CALIFORNIA

INTERSECTION CAPACITY UTILIZATION ANALYSIS

Location: Santa Anita Avenue and Ramona Boulevard **City:** El Monte
Project No.: EBA2014-07 **Analyzed By:** MYR **File Name:** 2014-07-02 2

Problem Condition: Future 2020 With 0.82% Annual Growth
Existing Geometric Configuration

Movement	Available Lanes		Peak Hour Volumes								Movement V/C Per Lane		Critical V/C	
			Existing		Other Proj.		Project		Study Vol.					
	No.	Cap.	AM	PM	AM	PM	AM	PM	AM	PM	AM	PM	AM	PM
N/B Left	1.0	1600	44	41	0	0	0	0	46	43	0.029	0.027		
N/B Thru	3.0	4800	963	1438	0	0	0	0	995	1486	0.257	0.361	0.257	0.361
N/B Right	0.0	0	231	238	0	0	0	0	239	246	0.000	0.000		
S/B Left	1.0	1600	73	82	0	0	0	0	76	84	0.047	0.053	0.047	0.053
S/B Thru	3.0	4800	1257	1000	0	0	0	0	1299	1033	0.276	0.222		
S/B Right	0.0	0	23	33	0	0	0	0	23	34	0.000	0.000		
E/B Left	1.0	1600	25	50	0	0	0	0	26	51	0.016	0.032	0.016	0.032
E/B Thru	2.0	3200	26	54	0	0	0	0	27	56	0.025	0.034		
E/B Right	0.0	0	52	52	0	0	0	0	53	53	0.000	0.000		
W/B Left	2.0	2880	203	138	0	0	0	0	209	143	0.073	0.050		
W/B Thru	1.0	1600	49	26	0	0	0	0	50	27	0.097	0.057	0.097	0.057
W/B Right	0.0	0	101	62	0	0	0	0	105	64	0.000	0.000		
	ANALYSIS RESULTS :								Sum Of Critical V/C:				0.417	0.502
									Lost Time:				0.100	0.100
									Total V/C:				0.517	0.602
									Level Of Service:				A	A

ASSUMPTIONS AND METHODOLOGY

Existing Conditions Year: 2016
Study Volume Year: 2020
Annual Growth Factor: 0.82 Percent

Lane Capacity
Single Through Lane = 1600 Vehicles Per Hour
Single Turn Lane = 1600 Vehicles Per Hour
Dual Turn Lane = 2880 Vehicles Per Hour

Level Of Service Definition

Total V/C	LOS
Under 0.605	A
0.605 - 0.704	B
0.705 - 0.804	C
0.805 - 0.904	D
0.905 - 1.004	E
Over 1.005	F

Lost time for signal Yellow and All red intervals: 0.10 of V/C Ratio

NOTES:

EVAN BROOKS ASSOCIATES, PASADENA, CALIFORNIA

INTERSECTION CAPACITY UTILIZATION ANALYSIS

Location: Santa Anita Avenue and Brockway Street/!-10 Ramps **City:** El Monte
Project No.: EBA2014-07 **Analyzed By:** MYR **File Name:** 2014-07-03 2

Problem Condition: Future 2020 With 0.82% Annual Growth
Existing Geometric Configuration

Movement	Available Lanes		Peak Hour Volumes								Movement V/C Per Lane		Critical V/C	
			Existing		Other Proj.		Project		Study Vol.					
	No.	Cap.	AM	PM	AM	PM	AM	PM	AM	PM	AM	PM	AM	PM
N/B Left	1.0	1600	270	419	0	0	0	0	279	433	0.174	0.271	0.174	0.271
N/B Thru	2.0	3200	938	1436	0	0	0	0	969	1484	0.303	0.464		
N/B Right	0.0	0	0	0	0	0	0	0	0	0	0.000	0.000		
S/B Left	0.0	0	0	0	0	0	0	0	0	0	0.000	0.000		
S/B Thru	3.0	4800	1126	920	0	0	0	0	1164	950	0.242	0.198	0.242	0.198
S/B Right	1.0	1600	370	304	0	0	0	0	382	314	0.239	0.196		
E/B Left	0.0	0	0	0	0	0	0	0	0	0	0.000	0.000	0.000	0.000
E/B Thru	0.0	0	0	0	0	0	0	0	0	0	0.000	0.000		
E/B Right	0.0	0	0	0	0	0	0	0	0	0	0.000	0.000		
W/B Left	2.0	2880	459	297	0	0	0	0	474	306	0.165	0.106		
W/B Thru	1.0	1600	209	152	0	0	0	0	216	157	0.368	0.273	0.368	0.273
W/B Right	0.0	0	362	271	0	0	0	0	374	280	0.000	0.000		
	ANALYSIS RESULTS :								Sum Of Critical V/C:				0.785	0.742
									Lost Time:				0.100	0.100
									Total V/C:				0.885	0.842
									Level Of Service:				D	D

ASSUMPTIONS AND METHODOLOGY

Existing Conditions Year: 2016
Study Volume Year: 2020
Annual Growth Factor: 0.82 Percent

Lane Capacity
Single Through Lane = 1600 Vehicles Per Hour
Single Turn Lane = 1600 Vehicles Per Hour
Dual Turn Lane = 2880 Vehicles Per Hour

Level Of Service Definition

Total V/C	LOS
Under 0.605	A
0.605 - 0.704	B
0.705 - 0.804	C
0.805 - 0.904	D
0.905 - 1.004	E
Over 1.005	F

Lost time for signal Yellow and All red intervals: 0.10 of V/C Ratio

NOTES:

EVAN BROOKS ASSOCIATES, PASADENA, CALIFORNIA

INTERSECTION CAPACITY UTILIZATION ANALYSIS

Location: Santa Anita Avenue and Asher Street/!-10 EB Ramps **City:** El Monte
Project No.: EBA2014-07 **Analyzed By:** MYR **File Name:** 2014-07-04 2

Problem Condition: Future 2020 With 0.82% Annual Growth
Existing Geometric Configuration

Movement	Available Lanes		Peak Hour Volumes								Movement V/C Per Lane		Critical V/C	
			Existing		Other Proj.		Project		Study Vol.					
	No.	Cap.	AM	PM	AM	PM	AM	PM	AM	PM	AM	PM	AM	PM
N/B Left	0.0	0	0	0	0	0	0	0	0	0	0.000	0.000		
N/B Thru	3.5	5600	778	1252	0	0	0	0	804	1294	0.144	0.231		
N/B Right	0.5	800	305	180	0	0	0	0	315	186	0.394	0.232	0.394	0.232
S/B Left	1.0	1600	323	272	0	0	0	0	334	281	0.209	0.175	0.209	0.175
S/B Thru	2.0	3200	1242	1025	0	0	0	0	1283	1059	0.401	0.331		
S/B Right	0.0	0	0	0	0	0	0	0	0	0	0.000	0.000		
E/B Left	1.5	2400	390	617	0	0	0	0	402	637	0.168	0.266		
E/B Thru	0.5	0	97	148	0	0	0	0	100	153	0.000	0.000		
E/B Right	1.0	1600	385	449	0	0	0	0	398	464	0.249	0.290	0.249	0.290
W/B Left	0.0	0	0	0	0	0	0	0	0	0	0.000	0.000	0.000	0.000
W/B Thru	0.0	0	0	0	0	0	0	0	0	0	0.000	0.000		
W/B Right	0.0	0	0	0	0	0	0	0	0	0	0.000	0.000		
	ANALYSIS RESULTS :								Sum Of Critical V/C:				0.851	0.698
									Lost Time:				0.100	0.100
									Total V/C:				0.951	0.798
									Level Of Service:				E	C

ASSUMPTIONS AND METHODOLOGY

Existing Conditions Year: 2016
Study Volume Year: 2020
Annual Growth Factor: 0.82 Percent

Lane Capacity
Single Through Lane = 1600 Vehicles Per Hour
Single Turn Lane = 1600 Vehicles Per Hour
Dual Turn Lane = 2880 Vehicles Per Hour

Level Of Service Definition

Total V/C	LOS
Under 0.605	A
0.605 - 0.704	B
0.705 - 0.804	C
0.805 - 0.904	D
0.905 - 1.004	E
Over 1.005	F

Lost time for signal Yellow and All red intervals: 0.10 of V/C Ratio

NOTES:

EVAN BROOKS ASSOCIATES, PASADENA, CALIFORNIA

INTERSECTION CAPACITY UTILIZATION ANALYSIS

Location: Tyler Avenue and Valley Boulevard **City:** El Monte
Project No.: EBA2014-07 **Analyzed By:** MYR **File Name:** 2014-07-05 2

Problem Condition: Future 2020 With 0.82% Annual Growth
Existing Geometric Configuration

Movement	Available Lanes		Peak Hour Volumes								Movement V/C Per Lane		Critical V/C	
			Existing		Other Proj.		Project		Study Vol.					
	No.	Cap.	AM	PM	AM	PM	AM	PM	AM	PM	AM	PM	AM	PM
N/B Left	1.0	1600	86	126	0	0	0	0	89	130	0.055	0.081	0.055	0.081
N/B Thru	2.0	3200	189	214	0	0	0	0	195	221	0.074	0.094		
N/B Right	0.0	0	39	76	0	0	0	0	41	79	0.000	0.000		
S/B Left	1.0	1600	146	98	0	0	0	0	151	101	0.094	0.063		
S/B Thru	2.0	3200	305	295	0	0	0	0	315	305	0.138	0.121	0.138	0.121
S/B Right	0.0	0	122	80	0	0	0	0	126	82	0.000	0.000		
E/B Left	1.0	1600	43	57	0	0	0	0	45	59	0.028	0.037	0.028	0.037
E/B Thru	2.0	3200	468	512	0	0	0	0	484	529	0.168	0.205		
E/B Right	0.0	0	53	123	0	0	0	0	54	127	0.000	0.000		
W/B Left	1.0	1600	29	123	0	0	0	0	30	127	0.019	0.079		
W/B Thru	2.0	3200	955	861	0	0	0	0	986	889	0.350	0.301	0.350	0.301
W/B Right	0.0	0	128	70	0	0	0	0	132	73	0.000	0.000		
	ANALYSIS RESULTS :								Sum Of Critical V/C:				0.571	0.540
									Lost Time:				0.100	0.100
									Total V/C:				0.671	0.640
									Level Of Service:				B	B

ASSUMPTIONS AND METHODOLOGY

Existing Conditions Year: 2016
Study Volume Year: 2020
Annual Growth Factor: 0.82 Percent

Lane Capacity
Single Through Lane = 1600 Vehicles Per Hour
Single Turn Lane = 1600 Vehicles Per Hour
Dual Turn Lane = 2880 Vehicles Per Hour

Level Of Service Definition

Total V/C	LOS
Under 0.605	A
0.605 - 0.704	B
0.705 - 0.804	C
0.805 - 0.904	D
0.905 - 1.004	E
Over 1.005	F

Lost time for signal Yellow and All red intervals: 0.10 of V/C Ratio

NOTES:

EVAN BROOKS ASSOCIATES, PASADENA, CALIFORNIA

INTERSECTION CAPACITY UTILIZATION ANALYSIS

Location: Tyler Avenue and Ramona Boulevard **City:** El Monte
Project No.: EBA2014-07 **Analyzed By:** MYR **File Name:** 2014-07-06 2

Problem Condition: Future 2020 With 0.82% Annual Growth
Existing Geometric Configuration

Movement	Available Lanes		Peak Hour Volumes								Movement V/C Per Lane		Critical V/C	
			Existing		Other Proj.		Project		Study Vol.					
	No.	Cap.	AM	PM	AM	PM	AM	PM	AM	PM	AM	PM	AM	PM
N/B Left	1.0	1600	61	27	0	0	0	0	63	28	0.039	0.018	0.039	
N/B Thru	2.0	3200	186	365	0	0	0	0	192	378	0.092	0.173		0.173
N/B Right	0.0	0	98	170	0	0	0	0	101	176	0.000	0.000		
S/B Left	1.0	1600	56	37	0	0	0	0	58	38	0.036	0.024		0.024
S/B Thru	1.0	1600	214	262	0	0	0	0	221	270	0.138	0.169	0.138	
S/B Right	1.0	1600	98	92	0	0	0	0	101	95	0.028	0.060		
E/B Left	1.0	1600	54	93	0	0	0	0	55	97	0.035	0.060	0.035	
E/B Thru	2.0	3200	225	580	0	0	0	0	232	599	0.081	0.204		0.204
E/B Right	0.0	0	27	53	0	0	0	0	28	54	0.000	0.000		
W/B Left	1.0	1600	75	111	0	0	0	0	77	115	0.048	0.072		0.072
W/B Thru	2.0	3200	482	330	0	0	0	0	498	341	0.170	0.124	0.170	
W/B Right	0.0	0	45	56	0	0	0	0	47	58	0.000	0.000		
	ANALYSIS RESULTS :								Sum Of Critical V/C:				0.382	0.473
									Lost Time:				0.100	0.100
									Total V/C:				0.482	0.573
									Level Of Service:				A	A

ASSUMPTIONS AND METHODOLOGY

Existing Conditions Year: 2016
Study Volume Year: 2020
Annual Growth Factor: 0.82 Percent

Lane Capacity
Single Through Lane = 1600 Vehicles Per Hour
Single Turn Lane = 1600 Vehicles Per Hour
Dual Turn Lane = 2880 Vehicles Per Hour

Level Of Service Definition

Total V/C	LOS
Under 0.605	A
0.605 - 0.704	B
0.705 - 0.804	C
0.805 - 0.904	D
0.905 - 1.004	E
Over 1.005	F

Lost time for signal Yellow and All red intervals: 0.10 of V/C Ratio

NOTES:

EVAN BROOKS ASSOCIATES, PASADENA, CALIFORNIA

INTERSECTION CAPACITY UTILIZATION ANALYSIS

Location: Valley Boulevard and Ramona Boulevard **City:** El Monte
Project No.: EBA2014-07 **Analyzed By:** MYR **File Name:** 2014-07-07 2

Problem Condition: Future 2020 With 0.82% Annual Growth
Existing Geometric Configuration

Movement	Available Lanes		Peak Hour Volumes								Movement V/C Per Lane		Critical V/C	
			Existing		Other Proj.		Project		Study Vol.					
	No.	Cap.	AM	PM	AM	PM	AM	PM	AM	PM	AM	PM	AM	PM
N/B Left	1.0	1600	194	200	0	0	0	0	201	207	0.125	0.129		
N/B Thru	2.0	3200	730	450	0	0	0	0	755	465	0.236	0.145	0.236	0.145
N/B Right	1.0	1600	32	58	0	0	0	0	33	60	0.021	0.016		
S/B Left	1.0	1600	172	517	0	0	0	0	177	534	0.111	0.334	0.111	0.334
S/B Thru	2.0	3200	472	750	0	0	0	0	488	775	0.152	0.242		
S/B Right	1.0	1600	10	14	0	0	0	0	11	15	0.007	0.009		
E/B Left	1.0	1600	11	21	0	0	0	0	12	21	0.007	0.013	0.007	
E/B Thru	2.0	3200	160	476	0	0	0	0	165	492	0.074	0.175		0.175
E/B Right	0.0	0	69	66	0	0	0	0	72	68	0.000	0.000		
W/B Left	1.0	1600	56	33	0	0	0	0	58	34	0.036	0.021		0.021
W/B Thru	2.0	3200	481	240	0	0	0	0	497	248	0.282	0.143	0.282	
W/B Right	0.0	0	393	204	0	0	0	0	406	210	0.000	0.000		
	ANALYSIS RESULTS :								Sum Of Critical V/C:				0.636	0.676
									Lost Time:				0.100	0.100
									Total V/C:				0.736	0.776
									Level Of Service:				C	C

ASSUMPTIONS AND METHODOLOGY

Existing Conditions Year: 2016
Study Volume Year: 2020
Annual Growth Factor: 0.82 Percent

Lane Capacity
Single Through Lane = 1600 Vehicles Per Hour
Single Turn Lane = 1600 Vehicles Per Hour
Dual Turn Lane = 2880 Vehicles Per Hour

Level Of Service Definition

Total V/C	LOS
Under 0.605	A
0.605 - 0.704	B
0.705 - 0.804	C
0.805 - 0.904	D
0.905 - 1.004	E
Over 1.005	F

Lost time for signal Yellow and All red intervals: 0.10 of V/C Ratio

NOTES:

EVAN BROOKS ASSOCIATES, PASADENA, CALIFORNIA

INTERSECTION CAPACITY UTILIZATION ANALYSIS

Location: Peck Road and Valley Boulevard **City:** El Monte
Project No.: EBA2014-07 **Analyzed By:** MYR **File Name:** 2014-07-08 2

Problem Condition: Future 2020 With 0.82% Annual Growth
Existing Geometric Configuration

Movement	Available Lanes		Peak Hour Volumes								Movement V/C Per Lane		Critical V/C	
			Existing		Other Proj.		Project		Study Vol.					
	No.	Cap.	AM	PM	AM	PM	AM	PM	AM	PM	AM	PM	AM	PM
N/B Left	1.0	1600	207	37	0	0	0	0	214	38	0.133	0.024	0.133	
N/B Thru	3.0	4800	675	577	0	0	0	0	697	596	0.213	0.181		0.181
N/B Right	0.0	0	313	265	0	0	0	0	323	273	0.000	0.000		
S/B Left	1.0	1600	194	191	0	0	0	0	201	197	0.125	0.123		0.123
S/B Thru	2.0	3200	876	826	0	0	0	0	905	853	0.283	0.267	0.283	
S/B Right	1.0	1600	199	148	0	0	0	0	206	153	0.083	0.018		
E/B Left	1.0	1600	71	120	0	0	0	0	74	124	0.046	0.077	0.046	
E/B Thru	2.0	3200	465	1259	0	0	0	0	480	1301	0.150	0.407		0.407
E/B Right	1.0	1600	74	339	0	0	0	0	77	350	0.048	0.195		
W/B Left	1.0	1600	55	201	0	0	0	0	57	208	0.035	0.130		0.130
W/B Thru	2.0	3200	894	846	0	0	0	0	923	874	0.289	0.273	0.289	
W/B Right	1.0	1600	192	160	0	0	0	0	199	165	0.124	0.103		
	ANALYSIS RESULTS :								Sum Of Critical V/C:				0.751	0.841
									Lost Time:				0.100	0.100
									Total V/C:				0.851	0.941
									Level Of Service:				D	E

ASSUMPTIONS AND METHODOLOGY

Existing Conditions Year: 2016
Study Volume Year: 2020
Annual Growth Factor: 0.82 Percent

Lane Capacity
Single Through Lane = 1600 Vehicles Per Hour
Single Turn Lane = 1600 Vehicles Per Hour
Dual Turn Lane = 2880 Vehicles Per Hour

Level Of Service Definition

Total V/C	LOS
Under 0.605	A
0.605 - 0.704	B
0.705 - 0.804	C
0.805 - 0.904	D
0.905 - 1.004	E
Over 1.005	F

Lost time for signal Yellow and All red intervals: 0.10 of V/C Ratio

NOTES:

EVAN BROOKS ASSOCIATES, PASADENA, CALIFORNIA

INTERSECTION CAPACITY UTILIZATION ANALYSIS

Location: Santa Anita Avenue and Valley Mall **City:** El Monte
Project No.: EBA2014-07 **Analyzed By:** MYR **File Name:** 2014-07-09 2

Problem Condition: Future 2020 With 0.82% Annual Growth
Existing Geometric Configuration

Movement	Available Lanes		Peak Hour Volumes								Movement V/C Per Lane		Critical V/C	
			Existing		Other Proj.		Project		Study Vol.					
	No.	Cap.	AM	PM	AM	PM	AM	PM	AM	PM	AM	PM	AM	PM
N/B Left	0.0	0	0	0	0	0	0	0	0	0	0.000	0.000		
N/B Thru	3.0	4800	1145	1343	0	0	0	0	1183	1387	0.253	0.308	0.253	0.308
N/B Right	0.0	0	33	89	0	0	0	0	34	92	0.000	0.000		
S/B Left	1.0	1600	33	12	0	0	0	0	34	13	0.021	0.008	0.021	0.008
S/B Thru	3.0	4800	970	706	0	0	0	0	1002	730	0.209	0.152		
S/B Right	0.0	0	0	0	0	0	0	0	0	0	0.000	0.000		
E/B Left	0.0	0	2	0	0	0	0	0	2	0	0.000	0.000		
E/B Thru	1.0	1600	143	355	0	0	0	0	148	367	0.094	0.229		
E/B Right	1.0	1600	459	459	0	0	0	0	475	475	0.297	0.297	0.297	0.297
W/B Left	0.0	0	15	113	0	0	0	0	16	117	0.000	0.000	0.000	0.000
W/B Thru	1.0	1600	0	0	0	0	0	0	0	0	0.039	0.147		
W/B Right	0.0	0	45	115	0	0	0	0	46	119	0.000	0.000		
	ANALYSIS RESULTS :								Sum Of Critical V/C:				0.571	0.613
									Lost Time:				0.100	0.100
									Total V/C:				0.671	0.713
									Level Of Service:				B	C

ASSUMPTIONS AND METHODOLOGY

Existing Conditions Year: 2016
Study Volume Year: 2020
Annual Growth Factor: 0.82 Percent

Lane Capacity
Single Through Lane = 1600 Vehicles Per Hour
Single Turn Lane = 1600 Vehicles Per Hour
Dual Turn Lane = 2880 Vehicles Per Hour

Level Of Service Definition

Total V/C	LOS
Under 0.605	A
0.605 - 0.704	B
0.705 - 0.804	C
0.805 - 0.904	D
0.905 - 1.004	E
Over 1.005	F

Lost time for signal Yellow and All red intervals: 0.10 of V/C Ratio

NOTES:

EVAN BROOKS ASSOCIATES, PASADENA, CALIFORNIA

FUTURE 2020 AMBIENT LEVEL OF SERVICE ANALYSIS

WITH RELATED PROJECTS

INTERSECTION CAPACITY UTILIZATION ANALYSIS

Location: Santa Anita Avenue and Valley Boulevard **City:** El Monte
Project No.: EBA2014-07 **Analyzed By:** MYR **File Name:** 2014-07-01 3

Problem Condition: Future 2020 With Related Projects
Existing Geometric Configuration

Movement	Available Lanes		Peak Hour Volumes								Movement V/C Per Lane		Critical V/C	
			Existing		Other Proj.		Project		Study Vol.					
	No.	Cap.	AM	PM	AM	PM	AM	PM	AM	PM	AM	PM	AM	PM
N/B Left	2.0	2880	495	411	127	88	0	0	639	513	0.222	0.178	0.222	0.178
N/B Thru	3.0	4800	580	1058	70	87	0	0	669	1180	0.152	0.265		
N/B Right	0.0	0	41	76	19	15	0	0	62	94	0.000	0.000		
S/B Left	1.0	1600	62	60	4	4	0	0	68	66	0.042	0.041		
S/B Thru	3.0	4800	877	648	63	77	0	0	969	746	0.284	0.190	0.284	0.190
S/B Right	0.0	0	353	137	31	22	0	0	396	164	0.000	0.000		
E/B Left	1.0	1600	88	222	12	28	0	0	102	257	0.064	0.161	0.064	0.161
E/B Thru	2.0	3200	478	705	77	170	0	0	571	898	0.191	0.319		
E/B Right	0.0	0	8	5	32	117	0	0	41	122	0.000	0.000		
W/B Left	2.0	2880	33	104	6	24	0	0	40	132	0.014	0.046		
W/B Thru	2.0	3200	1009	483	120	131	0	0	1163	629	0.372	0.216	0.372	0.216
W/B Right	0.0	0	25	56	2	4	0	0	27	61	0.000	0.000		
	ANALYSIS RESULTS :								Sum Of Critical V/C:				0.942	0.744
									Lost Time:				0.100	0.100
									Total V/C:				1.042	0.844
									Level Of Service:				F	D

ASSUMPTIONS AND METHODOLOGY

Existing Conditions Year: 2016
Study Volume Year: 2020
Annual Growth Factor: 0.82 Percent

Lane Capacity
Single Through Lane = 1600 Vehicles Per Hour
Single Turn Lane = 1600 Vehicles Per Hour
Dual Turn Lane = 2880 Vehicles Per Hour

Level Of Service Definition

Total V/C	LOS
Under 0.605	A
0.605 - 0.704	B
0.705 - 0.804	C
0.805 - 0.904	D
0.905 - 1.004	E
Over 1.005	F

Lost time for signal Yellow and All red intervals: 0.10 of V/C Ratio

NOTES:

EVAN BROOKS ASSOCIATES, PASADENA, CALIFORNIA

INTERSECTION CAPACITY UTILIZATION ANALYSIS

Location: Santa Anita Avenue and Ramona Boulevard **City:** El Monte
Project No.: EBA2014-07 **Analyzed By:** MYR **File Name:** 2014-07-02 3

Problem Condition: Future 2020 With Related Projects
Existing Geometric Configuration

Movement	Available Lanes		Peak Hour Volumes								Movement V/C Per Lane		Critical V/C	
			Existing		Other Proj.		Project		Study Vol.					
	No.	Cap.	AM	PM	AM	PM	AM	PM	AM	PM	AM	PM	AM	PM
N/B Left	1.0	1600	44	41	2	2	0	0	48	45	0.030	0.028	0.030	
N/B Thru	3.0	4800	963	1438	107	211	0	0	1102	1697	0.282	0.408		0.408
N/B Right	0.0	0	231	238	14	15	0	0	253	261	0.000	0.000		
S/B Left	1.0	1600	73	82	7	19	0	0	83	103	0.052	0.064		0.064
S/B Thru	3.0	4800	1257	1000	177	156	0	0	1476	1189	0.313	0.255	0.313	
S/B Right	0.0	0	23	33	2	2	0	0	25	36	0.000	0.000		
E/B Left	1.0	1600	25	50	2	4	0	0	27	55	0.017	0.034	0.017	0.034
E/B Thru	2.0	3200	26	54	2	4	0	0	28	59	0.027	0.036		
E/B Right	0.0	0	52	52	4	4	0	0	57	57	0.000	0.000		
W/B Left	2.0	2880	203	138	12	8	0	0	221	151	0.077	0.053		
W/B Thru	1.0	1600	49	26	3	2	0	0	54	28	0.111	0.062	0.111	0.062
W/B Right	0.0	0	101	62	19	7	0	0	124	71	0.000	0.000		
	ANALYSIS RESULTS :								Sum Of Critical V/C:				0.471	0.569
									Lost Time:				0.100	0.100
									Total V/C:				0.571	0.669
									Level Of Service:				A	B

ASSUMPTIONS AND METHODOLOGY

Existing Conditions Year: 2016
Study Volume Year: 2020
Annual Growth Factor: 0.82 Percent

Lane Capacity
Single Through Lane = 1600 Vehicles Per Hour
Single Turn Lane = 1600 Vehicles Per Hour
Dual Turn Lane = 2880 Vehicles Per Hour

Level Of Service Definition

Total V/C	LOS
Under 0.605	A
0.605 - 0.704	B
0.705 - 0.804	C
0.805 - 0.904	D
0.905 - 1.004	E
Over 1.005	F

Lost time for signal Yellow and All red intervals: 0.10 of V/C Ratio

NOTES:

EVAN BROOKS ASSOCIATES, PASADENA, CALIFORNIA

INTERSECTION CAPACITY UTILIZATION ANALYSIS

Location: Santa Anita Avenue and Brockway Street/!-10 Ramps **City:** El Monte
Project No.: EBA2014-07 **Analyzed By:** MYR **File Name:** 2014-07-03 3

Problem Condition: Future 2020 With Related Projects
Existing Geometric Configuration

Movement	Available Lanes		Peak Hour Volumes								Movement V/C Per Lane		Critical V/C	
			Existing		Other Proj.		Project		Study Vol.					
	No.	Cap.	AM	PM	AM	PM	AM	PM	AM	PM	AM	PM	AM	PM
N/B Left	1.0	1600	270	419	17	26	0	0	296	459	0.185	0.287	0.185	0.287
N/B Thru	2.0	3200	938	1436	127	174	0	0	1096	1658	0.343	0.518		
N/B Right	0.0	0	0	0	0	0	0	0	0	0	0.000	0.000		
S/B Left	0.0	0	0	0	0	0	0	0	0	0	0.000	0.000		
S/B Thru	3.0	4800	1126	920	142	167	0	0	1305	1117	0.272	0.233		0.233
S/B Right	1.0	1600	370	304	56	39	0	0	439	353	0.274	0.221	0.274	
E/B Left	0.0	0	0	0	0	0	0	0	0	0	0.000	0.000	0.000	0.000
E/B Thru	0.0	0	0	0	0	0	0	0	0	0	0.000	0.000		
E/B Right	0.0	0	0	0	0	0	0	0	0	0	0.000	0.000		
W/B Left	2.0	2880	459	297	29	18	0	0	503	324	0.175	0.113		
W/B Thru	1.0	1600	209	152	13	10	0	0	229	167	0.399	0.317	0.399	0.317
W/B Right	0.0	0	362	271	35	61	0	0	409	341	0.000	0.000		
	ANALYSIS RESULTS :								Sum Of Critical V/C:				0.858	0.837
									Lost Time:				0.100	0.100
									Total V/C:				0.958	0.937
									Level Of Service:				E	E

ASSUMPTIONS AND METHODOLOGY

Existing Conditions Year: 2016
Study Volume Year: 2020
Annual Growth Factor: 0.82 Percent

Lane Capacity
Single Through Lane = 1600 Vehicles Per Hour
Single Turn Lane = 1600 Vehicles Per Hour
Dual Turn Lane = 2880 Vehicles Per Hour

Level Of Service Definition

Total V/C	LOS
Under 0.605	A
0.605 - 0.704	B
0.705 - 0.804	C
0.805 - 0.904	D
0.905 - 1.004	E
Over 1.005	F

Lost time for signal Yellow and All red intervals: 0.10 of V/C Ratio

NOTES:

EVAN BROOKS ASSOCIATES, PASADENA, CALIFORNIA

INTERSECTION CAPACITY UTILIZATION ANALYSIS

Location: Santa Anita Avenue and Asher Street/!-10 EB Ramps **City:** El Monte
Project No.: EBA2014-07 **Analyzed By:** MYR **File Name:** 2014-07-04 3

Problem Condition: Future 2020 With Related Projects
Existing Geometric Configuration

Movement	Available Lanes		Peak Hour Volumes								Movement V/C Per Lane		Critical V/C	
			Existing		Other Proj.		Project		Study Vol.					
	No.	Cap.	AM	PM	AM	PM	AM	PM	AM	PM	AM	PM	AM	PM
N/B Left	0.0	0	0	0	0	0	0	0	0	0	0.000	0.000		
N/B Thru	3.5	5600	778	1252	109	127	0	0	913	1421	0.163	0.254		0.254
N/B Right	0.5	800	305	180	19	12	0	0	334	197	0.418	0.247	0.418	
S/B Left	1.0	1600	323	272	57	46	0	0	391	327	0.244	0.204	0.244	0.204
S/B Thru	2.0	3200	1242	1025	112	145	0	0	1395	1203	0.436	0.376		
S/B Right	0.0	0	0	0	0	0	0	0	0	0	0.000	0.000		
E/B Left	1.5	2400	390	617	32	74	0	0	434	711	0.181	0.296		
E/B Thru	0.5	0	97	148	6	10	0	0	106	162	0.000	0.000		
E/B Right	1.0	1600	385	449	24	28	0	0	422	492	0.264	0.308	0.264	0.308
W/B Left	0.0	0	0	0	0	0	0	0	0	0	0.000	0.000	0.000	0.000
W/B Thru	0.0	0	0	0	0	0	0	0	0	0	0.000	0.000		
W/B Right	0.0	0	0	0	0	0	0	0	0	0	0.000	0.000		
	ANALYSIS RESULTS :								Sum Of Critical V/C:				0.926	0.766
									Lost Time:				0.100	0.100
									Total V/C:				1.026	0.866
									Level Of Service:				F	D

ASSUMPTIONS AND METHODOLOGY

Existing Conditions Year: 2016
Study Volume Year: 2020
Annual Growth Factor: 0.82 Percent

Lane Capacity
Single Through Lane = 1600 Vehicles Per Hour
Single Turn Lane = 1600 Vehicles Per Hour
Dual Turn Lane = 2880 Vehicles Per Hour

Level Of Service Definition

Total V/C	LOS
Under 0.605	A
0.605 - 0.704	B
0.705 - 0.804	C
0.805 - 0.904	D
0.905 - 1.004	E
Over 1.005	F

Lost time for signal Yellow and All red intervals: 0.10 of V/C Ratio

NOTES:

EVAN BROOKS ASSOCIATES, PASADENA, CALIFORNIA

INTERSECTION CAPACITY UTILIZATION ANALYSIS

Location: Tyler Avenue and Valley Boulevard **City:** El Monte
Project No.: EBA2014-07 **Analyzed By:** MYR **File Name:** 2014-07-05 3

Problem Condition: Future 2020 With Related Projects
Existing Geometric Configuration

Movement	Available Lanes		Peak Hour Volumes								Movement V/C Per Lane		Critical V/C	
			Existing		Other Proj.		Project		Study Vol.					
	No.	Cap.	AM	PM	AM	PM	AM	PM	AM	PM	AM	PM	AM	PM
N/B Left	1.0	1600	86	126	17	30	0	0	105	160	0.066	0.100	0.066	0.100
N/B Thru	2.0	3200	189	214	12	14	0	0	207	235	0.078	0.099		
N/B Right	0.0	0	39	76	2	4	0	0	43	83	0.000	0.000		
S/B Left	1.0	1600	146	98	9	6	0	0	160	107	0.100	0.067		
S/B Thru	2.0	3200	305	295	19	19	0	0	334	324	0.148	0.132	0.148	0.132
S/B Right	0.0	0	122	80	14	16	0	0	140	99	0.000	0.000		
E/B Left	1.0	1600	43	57	7	16	0	0	52	74	0.033	0.047	0.033	0.047
E/B Thru	2.0	3200	468	512	75	135	0	0	559	664	0.197	0.256		
E/B Right	0.0	0	53	123	16	29	0	0	70	156	0.000	0.000		
W/B Left	1.0	1600	29	123	2	8	0	0	32	135	0.020	0.084		
W/B Thru	2.0	3200	955	861	123	139	0	0	1110	1029	0.391	0.345	0.391	0.345
W/B Right	0.0	0	128	70	8	4	0	0	140	77	0.000	0.000		
	ANALYSIS RESULTS :								Sum Of Critical V/C:				0.637	0.624
									Lost Time:				0.100	0.100
									Total V/C:				0.737	0.724
									Level Of Service:				C	C

ASSUMPTIONS AND METHODOLOGY

Existing Conditions Year: 2016
Study Volume Year: 2020
Annual Growth Factor: 0.82 Percent

Lane Capacity
Single Through Lane = 1600 Vehicles Per Hour
Single Turn Lane = 1600 Vehicles Per Hour
Dual Turn Lane = 2880 Vehicles Per Hour

Level Of Service Definition

Total V/C	LOS
Under 0.605	A
0.605 - 0.704	B
0.705 - 0.804	C
0.805 - 0.904	D
0.905 - 1.004	E
Over 1.005	F

Lost time for signal Yellow and All red intervals: 0.10 of V/C Ratio

NOTES:

EVAN BROOKS ASSOCIATES, PASADENA, CALIFORNIA

INTERSECTION CAPACITY UTILIZATION ANALYSIS

Location: Tyler Avenue and Ramona Boulevard **City:** El Monte
Project No.: EBA2014-07 **Analyzed By:** MYR **File Name:** 2014-07-06 3

Problem Condition: Future 2020 With Related Projects
Existing Geometric Configuration

Movement	Available Lanes		Peak Hour Volumes								Movement V/C Per Lane		Critical V/C	
			Existing		Other Proj.		Project		Study Vol.					
	No.	Cap.	AM	PM	AM	PM	AM	PM	AM	PM	AM	PM	AM	PM
N/B Left	1.0	1600	61	27	0	0	0	0	63	28	0.039	0.018	0.039	0.018
N/B Thru	2.0	3200	186	365	31	48	0	0	223	425	0.101	0.188		
N/B Right	0.0	0	98	170	0	0	0	0	101	176	0.000	0.000		
S/B Left	1.0	1600	56	37	0	0	0	0	58	38	0.036	0.024		
S/B Thru	1.0	1600	214	262	37	56	0	0	258	326	0.161	0.204	0.161	0.204
S/B Right	1.0	1600	98	92	0	0	0	0	101	95	0.028	0.060		
E/B Left	1.0	1600	54	93	0	0	0	0	55	97	0.035	0.060	0.035	
E/B Thru	2.0	3200	225	580	0	0	0	0	232	599	0.081	0.204		0.204
E/B Right	0.0	0	27	53	0	0	0	0	28	54	0.000	0.000		
W/B Left	1.0	1600	75	111	0	0	0	0	77	115	0.048	0.072		0.072
W/B Thru	2.0	3200	482	330	0	0	0	0	498	341	0.170	0.124	0.170	
W/B Right	0.0	0	45	56	0	0	0	0	47	58	0.000	0.000		
	ANALYSIS RESULTS :								Sum Of Critical V/C:				0.406	0.497
									Lost Time:				0.100	0.100
									Total V/C:				0.506	0.597
									Level Of Service:				A	A

ASSUMPTIONS AND METHODOLOGY

Existing Conditions Year: 2016
Study Volume Year: 2020
Annual Growth Factor: 0.82 Percent

Lane Capacity
Single Through Lane = 1600 Vehicles Per Hour
Single Turn Lane = 1600 Vehicles Per Hour
Dual Turn Lane = 2880 Vehicles Per Hour

Level Of Service Definition

Total V/C	LOS
Under 0.605	A
0.605 - 0.704	B
0.705 - 0.804	C
0.805 - 0.904	D
0.905 - 1.004	E
Over 1.005	F

Lost time for signal Yellow and All red intervals: 0.10 of V/C Ratio

NOTES:

EVAN BROOKS ASSOCIATES, PASADENA, CALIFORNIA

INTERSECTION CAPACITY UTILIZATION ANALYSIS

Location: Valley Boulevard and Ramona Boulevard **City:** El Monte
Project No.: EBA2014-07 **Analyzed By:** MYR **File Name:** 2014-07-07 3

Problem Condition: Future 2020 With Related Projects
Existing Geometric Configuration

Movement	Available Lanes		Peak Hour Volumes								Movement V/C Per Lane		Critical V/C	
			Existing		Other Proj.		Project		Study Vol.					
	No.	Cap.	AM	PM	AM	PM	AM	PM	AM	PM	AM	PM	AM	PM
N/B Left	1.0	1600	194	200	12	12	0	0	213	219	0.133	0.137		
N/B Thru	2.0	3200	730	450	72	65	0	0	827	530	0.258	0.166	0.258	0.166
N/B Right	1.0	1600	32	58	2	4	0	0	35	64	0.022	0.016		
S/B Left	1.0	1600	172	517	38	90	0	0	215	624	0.135	0.390	0.135	0.390
S/B Thru	2.0	3200	472	750	48	90	0	0	535	865	0.167	0.270		
S/B Right	1.0	1600	10	14	0	0	0	0	11	15	0.007	0.010		
E/B Left	1.0	1600	11	21	0	2	0	0	12	23	0.008	0.014	0.008	
E/B Thru	2.0	3200	160	476	11	31	0	0	176	523	0.080	0.189		0.189
E/B Right	0.0	0	69	66	7	14	0	0	79	82	0.000	0.000		
W/B Left	1.0	1600	56	33	5	3	0	0	62	37	0.039	0.023		0.023
W/B Thru	2.0	3200	481	240	31	16	0	0	528	264	0.310	0.165	0.310	
W/B Right	0.0	0	393	204	59	53	0	0	465	264	0.000	0.000		
	ANALYSIS RESULTS :								Sum Of Critical V/C:				0.711	0.768
									Lost Time:				0.100	0.100
									Total V/C:				0.811	0.868
									Level Of Service:				D	D

ASSUMPTIONS AND METHODOLOGY

Existing Conditions Year: 2016
Study Volume Year: 2020
Annual Growth Factor: 0.82 Percent

Lane Capacity
Single Through Lane = 1600 Vehicles Per Hour
Single Turn Lane = 1600 Vehicles Per Hour
Dual Turn Lane = 2880 Vehicles Per Hour

Level Of Service Definition

Total V/C	LOS
Under 0.605	A
0.605 - 0.704	B
0.705 - 0.804	C
0.805 - 0.904	D
0.905 - 1.004	E
Over 1.005	F

Lost time for signal Yellow and All red intervals: 0.10 of V/C Ratio

NOTES:

EVAN BROOKS ASSOCIATES, PASADENA, CALIFORNIA

INTERSECTION CAPACITY UTILIZATION ANALYSIS

Location: Peck Road and Valley Boulevard **City:** El Monte
Project No.: EBA2014-07 **Analyzed By:** MYR **File Name:** 2014-07-08 3

Problem Condition: Future 2020 With Related Projects
Existing Geometric Configuration

Movement	Available Lanes		Peak Hour Volumes								Movement V/C Per Lane		Critical V/C	
			Existing		Other Proj.		Project		Study Vol.					
	No.	Cap.	AM	PM	AM	PM	AM	PM	AM	PM	AM	PM	AM	PM
N/B Left	1.0	1600	207	37	19	13	0	0	233	52	0.146	0.032	0.146	
N/B Thru	3.0	4800	675	577	43	37	0	0	740	632	0.226	0.192		0.192
N/B Right	0.0	0	313	265	20	16	0	0	343	289	0.000	0.000		
S/B Left	1.0	1600	194	191	17	17	0	0	218	214	0.136	0.134		0.134
S/B Thru	2.0	3200	876	826	56	52	0	0	961	905	0.300	0.283	0.300	
S/B Right	1.0	1600	199	148	12	10	0	0	218	162	0.088	0.019		
E/B Left	1.0	1600	71	120	4	8	0	0	78	132	0.049	0.082	0.049	
E/B Thru	2.0	3200	465	1259	52	106	0	0	533	1407	0.166	0.440		0.440
E/B Right	1.0	1600	74	339	9	33	0	0	86	384	0.054	0.207		
W/B Left	1.0	1600	55	201	4	12	0	0	60	220	0.038	0.138		0.138
W/B Thru	2.0	3200	894	846	71	88	0	0	995	962	0.311	0.301	0.311	
W/B Right	1.0	1600	192	160	16	16	0	0	214	181	0.134	0.113		
	ANALYSIS RESULTS :								Sum Of Critical V/C:				0.805	0.903
									Lost Time:				0.100	0.100
									Total V/C:				0.905	1.003
									Level Of Service:				E	E

ASSUMPTIONS AND METHODOLOGY

Existing Conditions Year: 2016
Study Volume Year: 2020
Annual Growth Factor: 0.82 Percent

Lane Capacity
Single Through Lane = 1600 Vehicles Per Hour
Single Turn Lane = 1600 Vehicles Per Hour
Dual Turn Lane = 2880 Vehicles Per Hour

Level Of Service Definition

Total V/C	LOS
Under 0.605	A
0.605 - 0.704	B
0.705 - 0.804	C
0.805 - 0.904	D
0.905 - 1.004	E
Over 1.005	F

Lost time for signal Yellow and All red intervals: 0.10 of V/C Ratio

NOTES:

EVAN BROOKS ASSOCIATES, PASADENA, CALIFORNIA

INTERSECTION CAPACITY UTILIZATION ANALYSIS

Location: Santa Anita Avenue and Valley Mall **City:** El Monte
Project No.: EBA2014-07 **Analyzed By:** MYR **File Name:** 2014-07-09 3

Problem Condition: Future 2020 With Related Projects
Existing Geometric Configuration

Movement	Available Lanes		Peak Hour Volumes								Movement V/C Per Lane		Critical V/C	
			Existing		Other Proj.		Project		Study Vol.					
	No.	Cap.	AM	PM	AM	PM	AM	PM	AM	PM	AM	PM	AM	PM
N/B Left	0.0	0	0	0	0	0	0	0	0	0	0.000	0.000		
N/B Thru	3.0	4800	1145	1343	216	190	0	0	1399	1577	0.298	0.348	0.298	0.348
N/B Right	0.0	0	33	89	0	0	0	0	34	92	0.000	0.000		
S/B Left	1.0	1600	33	12	0	0	0	0	34	13	0.021	0.008	0.021	0.008
S/B Thru	3.0	4800	970	706	101	218	0	0	1103	948	0.230	0.198		
S/B Right	0.0	0	0	0	0	0	0	0	0	0	0.000	0.000		
E/B Left	0.0	0	2	0	0	0	0	0	2	0	0.000	0.000		
E/B Thru	1.0	1600	143	355	0	0	0	0	148	367	0.094	0.229		
E/B Right	1.0	1600	459	459	0	0	0	0	475	475	0.297	0.297	0.297	0.297
W/B Left	0.0	0	15	113	0	0	0	0	16	117	0.000	0.000	0.000	0.000
W/B Thru	1.0	1600	0	0	0	0	0	0	0	0	0.039	0.147		
W/B Right	0.0	0	45	115	0	0	0	0	46	119	0.000	0.000		
	ANALYSIS RESULTS :								Sum Of Critical V/C:				0.616	0.652
									Lost Time:				0.100	0.100
									Total V/C:				0.716	0.752
									Level Of Service:				C	C

ASSUMPTIONS AND METHODOLOGY

Existing Conditions Year: 2016
Study Volume Year: 2020
Annual Growth Factor: 0.82 Percent

Lane Capacity
Single Through Lane = 1600 Vehicles Per Hour
Single Turn Lane = 1600 Vehicles Per Hour
Dual Turn Lane = 2880 Vehicles Per Hour

Level Of Service Definition

Total V/C	LOS
Under 0.605	A
0.605 - 0.704	B
0.705 - 0.804	C
0.805 - 0.904	D
0.905 - 1.004	E
Over 1.005	F

Lost time for signal Yellow and All red intervals: 0.10 of V/C Ratio

NOTES:

EVAN BROOKS ASSOCIATES, PASADENA, CALIFORNIA

FUTURE 2020 AMBIENT LEVEL OF SERVICE ANALYSIS

WITH TOD SPECIFIC PLAN

INTERSECTION CAPACITY UTILIZATION ANALYSIS

Location: Santa Anita Avenue and Valley Boulevard **City:** El Monte
Project No.: EBA2014-07 **Analyzed By:** MYR **File Name:** 2014-07-01 4

Problem Condition: Future 2020 Cumulative With Project Conditions
Existing Geometric Configuration

Movement	Available Lanes		Peak Hour Volumes								Movement V/C Per Lane		Critical V/C	
			Existing		Other Proj.		Project		Study Vol.					
	No.	Cap.	AM	PM	AM	PM	AM	PM	AM	PM	AM	PM	AM	PM
N/B Left	2.0	2880	495	411	127	88	28	35	667	548	0.231	0.190	0.231	0.190
N/B Thru	3.0	4800	580	1058	70	87	31	79	700	1259	0.167	0.302		
N/B Right	0.0	0	41	76	19	15	42	95	104	190	0.000	0.000		
S/B Left	1.0	1600	62	60	4	4	4	10	72	75	0.045	0.047		
S/B Thru	3.0	4800	877	648	63	77	40	70	1009	816	0.293	0.204	0.293	0.204
S/B Right	0.0	0	353	137	31	22	0	0	396	164	0.000	0.000		
E/B Left	1.0	1600	88	222	12	28	0	0	102	257	0.064	0.161	0.064	
E/B Thru	2.0	3200	478	705	77	170	21	68	592	966	0.198	0.340		0.340
E/B Right	0.0	0	8	5	32	117	0	0	41	122	0.000	0.000		
W/B Left	2.0	2880	33	104	6	24	39	58	79	190	0.027	0.066		0.066
W/B Thru	2.0	3200	1009	483	120	131	42	45	1205	675	0.389	0.234	0.389	
W/B Right	0.0	0	25	56	2	4	14	14	41	75	0.000	0.000		
	ANALYSIS RESULTS :								Sum Of Critical V/C:				0.978	0.800
									Lost Time:				0.100	0.100
									Total V/C:				1.078	0.900
									Level Of Service:				F	D

ASSUMPTIONS AND METHODOLOGY

Existing Conditions Year: 2016
Study Volume Year: 2020
Annual Growth Factor: 0.82 Percent

Lane Capacity
Single Through Lane = 1600 Vehicles Per Hour
Single Turn Lane = 1600 Vehicles Per Hour
Dual Turn Lane = 2880 Vehicles Per Hour

Level Of Service Definition

Total V/C	LOS
Under 0.605	A
0.605 - 0.704	B
0.705 - 0.804	C
0.805 - 0.904	D
0.905 - 1.004	E
Over 1.005	F

Lost time for signal Yellow and All red intervals: 0.10 of V/C Ratio

NOTES:

EVAN BROOKS ASSOCIATES, PASADENA, CALIFORNIA

INTERSECTION CAPACITY UTILIZATION ANALYSIS

Location: Santa Anita Avenue and Ramona Boulevard **City:** El Monte
Project No.: EBA2014-07 **Analyzed By:** MYR **File Name:** 2014-07-02 4

Problem Condition: Future 2020 Cumulative With Project Conditions
Existing Geometric Configuration

Movement	Available Lanes		Peak Hour Volumes								Movement V/C Per Lane		Critical V/C	
			Existing		Other Proj.		Project		Study Vol.					
	No.	Cap.	AM	PM	AM	PM	AM	PM	AM	PM	AM	PM	AM	PM
N/B Left	1.0	1600	44	41	2	2	0	0	48	45	0.030	0.028		
N/B Thru	3.0	4800	963	1438	107	211	64	203	1166	1900	0.309	0.500	0.309	0.500
N/B Right	0.0	0	231	238	14	15	64	238	317	499	0.000	0.000		
S/B Left	1.0	1600	73	82	7	19	19	66	102	168	0.064	0.105	0.064	0.105
S/B Thru	3.0	4800	1257	1000	177	156	117	121	1593	1310	0.337	0.281		
S/B Right	0.0	0	23	33	2	2	0	0	25	36	0.000	0.000		
E/B Left	1.0	1600	25	50	2	4	0	0	27	55	0.017	0.034	0.017	
E/B Thru	2.0	3200	26	54	2	4	0	0	28	59	0.027	0.036		0.036
E/B Right	0.0	0	52	52	4	4	0	0	57	57	0.000	0.000		
W/B Left	2.0	2880	203	138	12	8	108	135	329	287	0.114	0.099		0.099
W/B Thru	1.0	1600	49	26	3	2	0	0	54	28	0.133	0.091	0.133	
W/B Right	0.0	0	101	62	19	7	35	46	159	117	0.000	0.000		
	ANALYSIS RESULTS :								Sum Of Critical V/C:				0.523	0.741
									Lost Time:				0.100	0.100
									Total V/C:				0.623	0.841
									Level Of Service:				B	D

ASSUMPTIONS AND METHODOLOGY

Existing Conditions Year: 2016
Study Volume Year: 2020
Annual Growth Factor: 0.82 Percent

Lane Capacity
Single Through Lane = 1600 Vehicles Per Hour
Single Turn Lane = 1600 Vehicles Per Hour
Dual Turn Lane = 2880 Vehicles Per Hour

Level Of Service Definition

Total V/C	LOS
Under 0.605	A
0.605 - 0.704	B
0.705 - 0.804	C
0.805 - 0.904	D
0.905 - 1.004	E
Over 1.005	F

Lost time for signal Yellow and All red intervals: 0.10 of V/C Ratio

NOTES:

EVAN BROOKS ASSOCIATES, PASADENA, CALIFORNIA

INTERSECTION CAPACITY UTILIZATION ANALYSIS

Location: Santa Anita Avenue and Brockway Street/!-10 Ramps **City:** El Monte
Project No.: EBA2014-07 **Analyzed By:** MYR **File Name:** 2014-07-03 4

Problem Condition: Future 2020 Cumulative With Project Conditions
Existing Geometric Configuration

Movement	Available Lanes		Peak Hour Volumes								Movement V/C Per Lane		Critical V/C	
			Existing		Other Proj.		Project		Study Vol.					
	No.	Cap.	AM	PM	AM	PM	AM	PM	AM	PM	AM	PM	AM	PM
N/B Left	1.0	1600	270	419	17	26	0	0	296	459	0.185	0.287	0.185	0.287
N/B Thru	2.0	3200	938	1436	127	174	67	245	1163	1903	0.363	0.595		
N/B Right	0.0	0	0	0	0	0	0	0	0	0	0.000	0.000		
S/B Left	0.0	0	0	0	0	0	0	0	0	0	0.000	0.000		
S/B Thru	3.0	4800	1126	920	142	167	104	119	1409	1237	0.294	0.258		
S/B Right	1.0	1600	370	304	56	39	124	141	563	494	0.352	0.309	0.352	0.309
E/B Left	0.0	0	0	0	0	0	0	0	0	0	0.000	0.000	0.000	0.000
E/B Thru	0.0	0	0	0	0	0	0	0	0	0	0.000	0.000		
E/B Right	0.0	0	0	0	0	0	0	0	0	0	0.000	0.000		
W/B Left	2.0	2880	459	297	29	18	0	0	503	324	0.175	0.113		
W/B Thru	1.0	1600	209	152	13	10	0	0	229	167	0.423	0.402	0.423	0.402
W/B Right	0.0	0	362	271	35	61	39	135	448	476	0.000	0.000		
	ANALYSIS RESULTS :								Sum Of Critical V/C:				0.960	0.998
									Lost Time:				0.100	0.100
									Total V/C:				1.060	1.098
									Level Of Service:				F	F

ASSUMPTIONS AND METHODOLOGY

Existing Conditions Year: 2016
Study Volume Year: 2020
Annual Growth Factor: 0.82 Percent

Lane Capacity
Single Through Lane = 1600 Vehicles Per Hour
Single Turn Lane = 1600 Vehicles Per Hour
Dual Turn Lane = 2880 Vehicles Per Hour

Level Of Service Definition

Total V/C	LOS
Under 0.605	A
0.605 - 0.704	B
0.705 - 0.804	C
0.805 - 0.904	D
0.905 - 1.004	E
Over 1.005	F

Lost time for signal Yellow and All red intervals: 0.10 of V/C Ratio

NOTES:

EVAN BROOKS ASSOCIATES, PASADENA, CALIFORNIA

INTERSECTION CAPACITY UTILIZATION ANALYSIS

Location: Santa Anita Avenue and Asher Street/!-10 EB Ramps **City:** El Monte
Project No.: EBA2014-07 **Analyzed By:** MYR **File Name:** 2014-07-04 4

Problem Condition: Future 2020 Cumulative With Project Conditions
Existing Geometric Configuration

Movement	Available Lanes		Peak Hour Volumes								Movement V/C Per Lane		Critical V/C	
			Existing		Other Proj.		Project		Study Vol.					
	No.	Cap.	AM	PM	AM	PM	AM	PM	AM	PM	AM	PM	AM	PM
N/B Left	0.0	0	0	0	0	0	0	0	0	0	0.000	0.000		
N/B Thru	3.5	5600	778	1252	109	127	16	55	929	1476	0.166	0.264		0.264
N/B Right	0.5	800	305	180	19	12	0	0	334	197	0.418	0.247	0.418	
S/B Left	1.0	1600	323	272	57	46	79	92	470	419	0.294	0.262	0.294	0.262
S/B Thru	2.0	3200	1242	1025	112	145	31	35	1426	1239	0.446	0.387		
S/B Right	0.0	0	0	0	0	0	0	0	0	0	0.000	0.000		
E/B Left	1.5	2400	390	617	32	74	63	214	497	926	0.207	0.386		0.386
E/B Thru	0.5	0	97	148	6	10	0	0	106	162	0.000	0.000		
E/B Right	1.0	1600	385	449	24	28	0	0	422	492	0.264	0.308	0.264	
W/B Left	0.0	0	0	0	0	0	0	0	0	0	0.000	0.000	0.000	
W/B Thru	0.0	0	0	0	0	0	0	0	0	0	0.000	0.000		0.000
W/B Right	0.0	0	0	0	0	0	0	0	0	0	0.000	0.000		0.000
	ANALYSIS RESULTS :								Sum Of Critical V/C:				0.975	0.911
									Lost Time:				0.100	0.100
									Total V/C:				1.075	1.011
									Level Of Service:				F	F

ASSUMPTIONS AND METHODOLOGY

Existing Conditions Year: 2016
Study Volume Year: 2020
Annual Growth Factor: 0.82 Percent

Lane Capacity
Single Through Lane = 1600 Vehicles Per Hour
Single Turn Lane = 1600 Vehicles Per Hour
Dual Turn Lane = 2880 Vehicles Per Hour

Level Of Service Definition

Total V/C	LOS
Under 0.605	A
0.605 - 0.704	B
0.705 - 0.804	C
0.805 - 0.904	D
0.905 - 1.004	E
Over 1.005	F

Lost time for signal Yellow and All red intervals: 0.10 of V/C Ratio

NOTES:

EVAN BROOKS ASSOCIATES, PASADENA, CALIFORNIA

INTERSECTION CAPACITY UTILIZATION ANALYSIS

Location: Tyler Avenue and Valley Boulevard **City:** El Monte
Project No.: EBA2014-07 **Analyzed By:** MYR **File Name:** 2014-07-05 4

Problem Condition: Future 2018 Cumulative With Project Conditions
Existing Geometric Configuration

Movement	Available Lanes		Peak Hour Volumes								Movement V/C Per Lane		Critical V/C	
			Existing		Other Proj.		Project		Study Vol.					
	No.	Cap.	AM	PM	AM	PM	AM	PM	AM	PM	AM	PM	AM	PM
N/B Left	1.0	1600	86	126	17	30	2	6	107	166	0.067	0.104	0.067	0.104
N/B Thru	2.0	3200	189	214	12	14	9	24	216	258	0.081	0.107		
N/B Right	0.0	0	39	76	2	4	0	0	43	83	0.000	0.000		
S/B Left	1.0	1600	146	98	9	6	0	0	160	107	0.100	0.067		
S/B Thru	2.0	3200	305	295	19	19	21	31	355	356	0.159	0.148	0.159	0.148
S/B Right	0.0	0	122	80	14	16	15	19	155	118	0.000	0.000		
E/B Left	1.0	1600	43	57	7	16	3	5	55	80	0.034	0.050	0.034	0.050
E/B Thru	2.0	3200	468	512	75	135	58	66	617	730	0.217	0.280		
E/B Right	0.0	0	53	123	16	29	8	9	78	165	0.000	0.000		
W/B Left	1.0	1600	29	123	2	8	10	37	42	172	0.026	0.108		
W/B Thru	2.0	3200	955	861	123	139	37	94	1147	1123	0.404	0.382	0.404	0.382
W/B Right	0.0	0	128	70	8	4	6	23	146	99	0.000	0.000		
	ANALYSIS RESULTS :								Sum Of Critical V/C:				0.665	0.683
									Lost Time:				0.100	0.100
									Total V/C:				0.765	0.783
									Level Of Service:				C	C

ASSUMPTIONS AND METHODOLOGY

Existing Conditions Year: 2016
Study Volume Year: 2020
Annual Growth Factor: 0.82 Percent

Lane Capacity
Single Through Lane = 1600 Vehicles Per Hour
Single Turn Lane = 1600 Vehicles Per Hour
Dual Turn Lane = 2880 Vehicles Per Hour

Level Of Service Definition

Total V/C	LOS
Under 0.605	A
0.605 - 0.704	B
0.705 - 0.804	C
0.805 - 0.904	D
0.905 - 1.004	E
Over 1.005	F

Lost time for signal Yellow and All red intervals: 0.10 of V/C Ratio

NOTES:

EVAN BROOKS ASSOCIATES, PASADENA, CALIFORNIA

INTERSECTION CAPACITY UTILIZATION ANALYSIS

Location: Tyler Avenue and Ramona Boulevard **City:** El Monte
Project No.: EBA2014-07 **Analyzed By:** MYR **File Name:** 2014-07-06 4

Problem Condition: Future 2020 Cumulative With Project Conditions
Existing Geometric Configuration

Movement	Available Lanes		Peak Hour Volumes								Movement V/C Per Lane		Critical V/C	
			Existing		Other Proj.		Project		Study Vol.					
	No.	Cap.	AM	PM	AM	PM	AM	PM	AM	PM	AM	PM	AM	PM
N/B Left	1.0	1600	61	27	0	0	2	7	65	36	0.041	0.022	0.041	
N/B Thru	2.0	3200	186	365	31	48	7	24	230	450	0.103	0.196		0.196
N/B Right	0.0	0	98	170	0	0	0	0	101	176	0.000	0.000		
S/B Left	1.0	1600	56	37	0	0	22	28	80	65	0.050	0.041		0.041
S/B Thru	1.0	1600	214	262	37	56	12	14	270	340	0.169	0.212	0.169	
S/B Right	1.0	1600	98	92	0	0	5	9	106	104	0.030	0.001		
E/B Left	1.0	1600	54	93	0	0	3	6	58	103	0.036	0.064	0.036	
E/B Thru	2.0	3200	225	580	0	0	36	50	268	649	0.094	0.221		0.221
E/B Right	0.0	0	27	53	0	0	4	5	32	59	0.000	0.000		
W/B Left	1.0	1600	75	111	0	0	0	0	77	115	0.048	0.072		0.072
W/B Thru	2.0	3200	482	330	0	0	24	79	522	420	0.182	0.165	0.182	
W/B Right	0.0	0	45	56	0	0	14	52	61	110	0.000	0.000		
	ANALYSIS RESULTS :								Sum Of Critical V/C:				0.428	0.530
									Lost Time:				0.100	0.100
									Total V/C:				0.528	0.630
									Level Of Service:				A	B

ASSUMPTIONS AND METHODOLOGY

Existing Conditions Year: 2016
Study Volume Year: 2020
Annual Growth Factor: 0.82 Percent

Lane Capacity
Single Through Lane = 1600 Vehicles Per Hour
Single Turn Lane = 1600 Vehicles Per Hour
Dual Turn Lane = 2880 Vehicles Per Hour

Level Of Service Definition

Total V/C	LOS
Under 0.605	A
0.605 - 0.704	B
0.705 - 0.804	C
0.805 - 0.904	D
0.905 - 1.004	E
Over 1.005	F

Lost time for signal Yellow and All red intervals: 0.10 of V/C Ratio

NOTES:

EVAN BROOKS ASSOCIATES, PASADENA, CALIFORNIA

INTERSECTION CAPACITY UTILIZATION ANALYSIS

Location: Valley Boulevard and Ramona Boulevard **City:** El Monte
Project No.: EBA2014-07 **Analyzed By:** MYR **File Name:** 2014-07-07 4

Problem Condition: Future 2020 Cumulative With Project Conditions
Existing Geometric Configuration

Movement	Available Lanes		Peak Hour Volumes								Movement V/C Per Lane		Critical V/C	
			Existing		Other Proj.		Project		Study Vol.					
	No.	Cap.	AM	PM	AM	PM	AM	PM	AM	PM	AM	PM	AM	PM
N/B Left	1.0	1600	194	200	12	12	3	11	216	231	0.135	0.144		
N/B Thru	2.0	3200	730	450	72	65	16	20	843	550	0.263	0.172	0.263	0.172
N/B Right	1.0	1600	32	58	2	4	40	50	75	114	0.047	0.071		
S/B Left	1.0	1600	172	517	38	90	0	0	215	624	0.135	0.390	0.135	0.390
S/B Thru	2.0	3200	472	750	48	90	14	52	549	917	0.172	0.287		
S/B Right	1.0	1600	10	14	0	0	4	13	15	29	0.009	0.018		
E/B Left	1.0	1600	11	21	0	2	10	11	22	34	0.014	0.021	0.014	
E/B Thru	2.0	3200	160	476	11	31	100	108	276	631	0.112	0.225		0.225
E/B Right	0.0	0	69	66	7	14	4	5	83	87	0.000	0.000		
W/B Left	1.0	1600	56	33	5	3	31	115	93	152	0.058	0.095		0.095
W/B Thru	2.0	3200	481	240	31	16	58	193	586	457	0.328	0.225	0.328	
W/B Right	0.0	0	393	204	59	53	0	0	465	264	0.000	0.000		
	ANALYSIS RESULTS :								Sum Of Critical V/C:				0.740	0.881
									Lost Time:				0.100	0.100
									Total V/C:				0.840	0.981
									Level Of Service:				D	E

ASSUMPTIONS AND METHODOLOGY

Existing Conditions Year: 2016
Study Volume Year: 2020
Annual Growth Factor: 0.82 Percent

Lane Capacity
Single Through Lane = 1600 Vehicles Per Hour
Single Turn Lane = 1600 Vehicles Per Hour
Dual Turn Lane = 2880 Vehicles Per Hour

Level Of Service Definition

Total V/C	LOS
Under 0.605	A
0.605 - 0.704	B
0.705 - 0.804	C
0.805 - 0.904	D
0.905 - 1.004	E
Over 1.005	F

Lost time for signal Yellow and All red intervals: 0.10 of V/C Ratio

NOTES:

EVAN BROOKS ASSOCIATES, PASADENA, CALIFORNIA

INTERSECTION CAPACITY UTILIZATION ANALYSIS

Location: Peck Road and Valley Boulevard **City:** El Monte
Project No.: EBA2014-07 **Analyzed By:** MYR **File Name:** 2014-07-08 4

Problem Condition: Future 2020 Cumulative With Project Conditions
Existing Geometric Configuration

Movement	Available Lanes		Peak Hour Volumes								Movement V/C Per Lane		Critical V/C	
			Existing		Other Proj.		Project		Study Vol.					
	No.	Cap.	AM	PM	AM	PM	AM	PM	AM	PM	AM	PM	AM	PM
N/B Left	1.0	1600	207	37	19	13	24	77	257	129	0.161	0.081	0.161	0.081
N/B Thru	3.0	4800	675	577	43	37	0	0	740	632	0.226	0.192		
N/B Right	0.0	0	313	265	20	16	0	0	343	289	0.000	0.000		
S/B Left	1.0	1600	194	191	17	17	0	0	218	214	0.136	0.134		
S/B Thru	2.0	3200	876	826	56	52	0	0	961	905	0.300	0.283	0.300	0.283
S/B Right	1.0	1600	199	148	12	10	14	50	232	213	0.083	0.035		
E/B Left	1.0	1600	71	120	4	8	21	25	99	157	0.062	0.098	0.062	
E/B Thru	2.0	3200	465	1259	52	106	86	101	619	1508	0.193	0.471		0.471
E/B Right	1.0	1600	74	339	9	33	51	55	137	439	0.086	0.194		
W/B Left	1.0	1600	55	201	4	12	0	0	60	220	0.038	0.138		0.138
W/B Thru	2.0	3200	894	846	71	88	57	202	1052	1165	0.329	0.364	0.329	
W/B Right	1.0	1600	192	160	16	16	0	0	214	181	0.134	0.113		
	ANALYSIS RESULTS :								Sum Of Critical V/C:				0.851	0.972
									Lost Time:				0.100	0.100
									Total V/C:				0.951	1.072
									Level Of Service:				E	F

ASSUMPTIONS AND METHODOLOGY

Existing Conditions Year: 2016
Study Volume Year: 2020
Annual Growth Factor: 0.82 Percent

Lane Capacity
Single Through Lane = 1600 Vehicles Per Hour
Single Turn Lane = 1600 Vehicles Per Hour
Dual Turn Lane = 2880 Vehicles Per Hour

Level Of Service Definition

Total V/C	LOS
Under 0.605	A
0.605 - 0.704	B
0.705 - 0.804	C
0.805 - 0.904	D
0.905 - 1.004	E
Over 1.005	F

Lost time for signal Yellow and All red intervals: 0.10 of V/C Ratio

NOTES:

EVAN BROOKS ASSOCIATES, PASADENA, CALIFORNIA

INTERSECTION CAPACITY UTILIZATION ANALYSIS

Location: Santa Anita Avenue and Valley Mall **City:** El Monte
Project No.: EBA2014-07 **Analyzed By:** MYR **File Name:** 2014-07-09 4

Problem Condition: Future 2020 Cumulative With Project Conditions
Existing Geometric Configuration

Movement	Available Lanes		Peak Hour Volumes								Movement V/C Per Lane		Critical V/C	
			Existing		Other Proj.		Project		Study Vol.					
	No.	Cap.	AM	PM	AM	PM	AM	PM	AM	PM	AM	PM	AM	PM
N/B Left	0.0	0	0	0	0	0	0	0	0	0	0.000	0.000		
N/B Thru	3.0	4800	1145	1343	216	190	106	268	1505	1844	0.321	0.404	0.321	0.404
N/B Right	0.0	0	33	89	0	0	0	0	34	92	0.000	0.000		
S/B Left	1.0	1600	33	12	0	0	0	0	34	13	0.021	0.008	0.021	0.008
S/B Thru	3.0	4800	970	706	101	218	148	185	1251	1133	0.261	0.236		
S/B Right	0.0	0	0	0	0	0	0	0	0	0	0.000	0.000		
E/B Left	0.0	0	2	0	0	0	0	0	2	0	0.000	0.000		
E/B Thru	1.0	1600	143	355	0	0	0	0	148	367	0.094	0.229		
E/B Right	1.0	1600	459	459	0	0	9	34	484	508	0.302	0.318	0.302	0.318
W/B Left	0.0	0	15	113	0	0	0	0	16	117	0.000	0.000	0.000	0.000
W/B Thru	1.0	1600	0	0	0	0	0	0	0	0	0.039	0.147		
W/B Right	0.0	0	45	115	0	0	0	0	46	119	0.000	0.000		
	ANALYSIS RESULTS :								Sum Of Critical V/C:				0.644	0.729
									Lost Time:				0.100	0.100
									Total V/C:				0.744	0.829
									Level Of Service:				C	D

ASSUMPTIONS AND METHODOLOGY

Existing Conditions Year: 2016
Study Volume Year: 2020
Annual Growth Factor: 0.82 Percent

Lane Capacity
Single Through Lane = 1600 Vehicles Per Hour
Single Turn Lane = 1600 Vehicles Per Hour
Dual Turn Lane = 2880 Vehicles Per Hour

Level Of Service Definition

Total V/C	LOS
Under 0.605	A
0.605 - 0.704	B
0.705 - 0.804	C
0.805 - 0.904	D
0.905 - 1.004	E
Over 1.005	F

Lost time for signal Yellow and All red intervals: 0.10 of V/C Ratio

NOTES:

EVAN BROOKS ASSOCIATES, PASADENA, CALIFORNIA

FUTURE 2035 LEVEL OF SERVICE ANALYSIS AT BUILD-OUT

INTERSECTION CAPACITY UTILIZATION ANALYSIS

Location: Santa Anita Avenue and Valley Boulevard **City:** El Monte
Project No.: EBA2014-07 **Analyzed By:** MYR **File Name:** 2014-07-01 7

Problem Condition: Future 2035 Ambient With Related Projects
Existing Geometric Configuration

Movement	Available Lanes		Peak Hour Volumes								Movement V/C Per Lane		Critical V/C	
			Existing		Other Proj.		Project		Study Vol.					
	No.	Cap.	AM	PM	AM	PM	AM	PM	AM	PM	AM	PM	AM	PM
N/B Left	2.0	2880	511	425	127	88	0	0	680	547	0.236	0.190	0.236	0.190
N/B Thru	3.0	4800	599	1093	70	87	0	0	717	1268	0.163	0.285		
N/B Right	0.0	0	43	79	19	15	0	0	65	101	0.000	0.000		
S/B Left	1.0	1600	64	62	4	4	0	0	73	71	0.046	0.044		
S/B Thru	3.0	4800	906	669	63	77	0	0	1043	800	0.306	0.203	0.306	0.203
S/B Right	0.0	0	365	142	31	22	0	0	425	176	0.000	0.000		
E/B Left	1.0	1600	91	230	12	28	0	0	110	276	0.069	0.172	0.069	0.172
E/B Thru	2.0	3200	494	728	77	170	0	0	611	957	0.204	0.337		
E/B Right	0.0	0	9	5	32	117	0	0	41	123	0.000	0.000		
W/B Left	2.0	2880	34	108	6	24	0	0	43	141	0.015	0.049		
W/B Thru	2.0	3200	1043	499	120	131	0	0	1247	670	0.399	0.230	0.399	0.230
W/B Right	0.0	0	26	58	2	4	0	0	29	66	0.000	0.000		
	ANALYSIS RESULTS :								Sum Of Critical V/C:				1.010	0.796
									Lost Time:				0.100	0.100
									Total V/C:				1.110	0.896
									Level Of Service:				F	D

ASSUMPTIONS AND METHODOLOGY

Existing Conditions Year: 2020
Study Volume Year: 2035
Annual Growth Factor: 0.52 Percent

Lane Capacity
Single Through Lane = 1600 Vehicles Per Hour
Single Turn Lane = 1600 Vehicles Per Hour
Dual Turn Lane = 2880 Vehicles Per Hour

Level Of Service Definition

Total V/C	LOS
Under 0.605	A
0.605 - 0.704	B
0.705 - 0.804	C
0.805 - 0.904	D
0.905 - 1.004	E
Over 1.005	F

Lost time for signal Yellow and All red intervals: 0.10 of V/C Ratio

NOTES:

EVAN BROOKS ASSOCIATES, PASADENA, CALIFORNIA

INTERSECTION CAPACITY UTILIZATION ANALYSIS

Location: Santa Anita Avenue and Valley Boulevard **City:** El Monte
Project No.: EBA2014-07 **Analyzed By:** MYR **File Name:** 2014-07-01 7

Problem Condition: Future 2035 Cumulative With Project Conditions
Existing Geometric Configuration

Movement	Available Lanes		Peak Hour Volumes								Movement V/C Per Lane		Critical V/C	
			Existing		Other Proj.		Project		Study Vol.					
	No.	Cap.	AM	PM	AM	PM	AM	PM	AM	PM	AM	PM	AM	PM
N/B Left	2.0	2880	511	425	127	88	28	35	708	582	0.246	0.202	0.246	0.202
N/B Thru	3.0	4800	599	1093	70	87	31	79	748	1347	0.178	0.322		
N/B Right	0.0	0	43	79	19	15	42	95	107	196	0.000	0.000		
S/B Left	1.0	1600	64	62	4	4	4	10	77	80	0.048	0.050		
S/B Thru	3.0	4800	906	669	63	77	40	70	1083	870	0.314	0.218	0.314	0.218
S/B Right	0.0	0	365	142	31	22	0	0	425	176	0.000	0.000		
E/B Left	1.0	1600	91	230	12	28	0	0	110	276	0.069	0.172	0.069	
E/B Thru	2.0	3200	494	728	77	170	21	68	632	1025	0.210	0.359		0.359
E/B Right	0.0	0	9	5	32	117	0	0	41	123	0.000	0.000		
W/B Left	2.0	2880	34	108	6	24	39	58	82	198	0.028	0.069		0.069
W/B Thru	2.0	3200	1043	499	120	131	42	45	1289	715	0.417	0.248	0.417	
W/B Right	0.0	0	26	58	2	4	14	14	43	80	0.000	0.000		
	ANALYSIS RESULTS :								Sum Of Critical V/C:				1.045	0.848
									Lost Time:				0.100	0.100
									Total V/C:				1.145	0.948
									Level Of Service:				F	E

ASSUMPTIONS AND METHODOLOGY

Existing Conditions Year: 2020
Study Volume Year: 2035
Annual Growth Factor: 0.52 Percent

Lane Capacity
Single Through Lane = 1600 Vehicles Per Hour
Single Turn Lane = 1600 Vehicles Per Hour
Dual Turn Lane = 2880 Vehicles Per Hour

Level Of Service Definition

Total V/C	LOS
Under 0.605	A
0.605 - 0.704	B
0.705 - 0.804	C
0.805 - 0.904	D
0.905 - 1.004	E
Over 1.005	F

Lost time for signal Yellow and All red intervals: 0.10 of V/C Ratio

NOTES:

EVAN BROOKS ASSOCIATES, PASADENA, CALIFORNIA

INTERSECTION CAPACITY UTILIZATION ANALYSIS

Location: Santa Anita Avenue and Ramona Boulevard **City:** El Monte
Project No.: EBA2014-07 **Analyzed By:** MYR **File Name:** 2014-07-02 5

Problem Condition: Future 2035 With Related Projects
Existing Geometric Configuration

Movement	Available Lanes		Peak Hour Volumes								Movement V/C Per Lane		Critical V/C	
			Existing		Other Proj.		Project		Study Vol.					
	No.	Cap.	AM	PM	AM	PM	AM	PM	AM	PM	AM	PM	AM	PM
N/B Left	1.0	1600	46	43	2	2	0	0	52	48	0.032	0.030	0.032	
N/B Thru	3.0	4800	995	1486	107	211	0	0	1182	1817	0.303	0.437		0.437
N/B Right	0.0	0	239	246	14	15	0	0	273	281	0.000	0.000		
S/B Left	1.0	1600	76	84	7	19	0	0	89	110	0.056	0.069		0.069
S/B Thru	3.0	4800	1299	1033	177	156	0	0	1581	1273	0.335	0.273	0.335	
S/B Right	0.0	0	23	34	2	2	0	0	27	39	0.000	0.000		
E/B Left	1.0	1600	26	51	2	4	0	0	29	59	0.018	0.037	0.018	0.037
E/B Thru	2.0	3200	27	56	2	4	0	0	31	64	0.029	0.039		
E/B Right	0.0	0	53	53	4	4	0	0	61	61	0.000	0.000		
W/B Left	2.0	2880	209	143	12	8	0	0	238	163	0.083	0.057		
W/B Thru	1.0	1600	50	27	3	2	0	0	58	31	0.119	0.067	0.119	0.067
W/B Right	0.0	0	105	64	19	7	0	0	132	76	0.000	0.000		
	ANALYSIS RESULTS :								Sum Of Critical V/C:				0.505	0.609
									Lost Time:				0.100	0.100
									Total V/C:				0.605	0.709
									Level Of Service:				A	C

ASSUMPTIONS AND METHODOLOGY

Existing Conditions Year: 2020
Study Volume Year: 2035
Annual Growth Factor: 0.52 Percent

Lane Capacity
Single Through Lane = 1600 Vehicles Per Hour
Single Turn Lane = 1600 Vehicles Per Hour
Dual Turn Lane = 2880 Vehicles Per Hour

Level Of Service Definition

Total V/C	LOS
Under 0.605	A
0.605 - 0.704	B
0.705 - 0.804	C
0.805 - 0.904	D
0.905 - 1.004	E
Over 1.005	F

Lost time for signal Yellow and All red intervals: 0.10 of V/C Ratio

NOTES:

EVAN BROOKS ASSOCIATES, PASADENA, CALIFORNIA

INTERSECTION CAPACITY UTILIZATION ANALYSIS

Location: Santa Anita Avenue and Ramona Boulevard **City:** El Monte
Project No.: EBA2014-07 **Analyzed By:** MYR **File Name:** 2014-07-02 6

Problem Condition: Future 2035 Cumulative With Project Conditions
Existing Geometric Configuration

Movement	Available Lanes		Peak Hour Volumes								Movement V/C Per Lane		Critical V/C	
			Existing		Other Proj.		Project		Study Vol.					
	No.	Cap.	AM	PM	AM	PM	AM	PM	AM	PM	AM	PM	AM	PM
N/B Left	1.0	1600	46	43	2	2	0	0	52	48	0.032	0.030		
N/B Thru	3.0	4800	995	1486	107	211	64	203	1246	2021	0.330	0.529	0.330	0.529
N/B Right	0.0	0	239	246	14	15	64	238	337	519	0.000	0.000		
S/B Left	1.0	1600	76	84	7	19	19	66	108	175	0.068	0.110	0.068	0.110
S/B Thru	3.0	4800	1299	1033	177	156	117	121	1698	1394	0.359	0.299		
S/B Right	0.0	0	23	34	2	2	0	0	27	39	0.000	0.000		
E/B Left	1.0	1600	26	51	2	4	0	0	29	59	0.018	0.037	0.018	
E/B Thru	2.0	3200	27	56	2	4	0	0	31	64	0.029	0.039		0.039
E/B Right	0.0	0	53	53	4	4	0	0	61	61	0.000	0.000		
W/B Left	2.0	2880	209	143	12	8	108	135	346	298	0.120	0.103		0.103
W/B Thru	1.0	1600	50	27	3	2	0	0	58	31	0.141	0.096	0.141	
W/B Right	0.0	0	105	64	19	7	35	46	167	122	0.000	0.000		
	ANALYSIS RESULTS :								Sum Of Critical V/C:				0.556	0.781
									Lost Time:				0.100	0.100
									Total V/C:				0.656	0.881
									Level Of Service:				B	D

ASSUMPTIONS AND METHODOLOGY

Existing Conditions Year: 2020
Study Volume Year: 2035
Annual Growth Factor: 0.52 Percent

Lane Capacity
Single Through Lane = 1600 Vehicles Per Hour
Single Turn Lane = 1600 Vehicles Per Hour
Dual Turn Lane = 2880 Vehicles Per Hour

Level Of Service Definition

Total V/C	LOS
Under 0.605	A
0.605 - 0.704	B
0.705 - 0.804	C
0.805 - 0.904	D
0.905 - 1.004	E
Over 1.005	F

Lost time for signal Yellow and All red intervals: 0.10 of V/C Ratio

NOTES:

EVAN BROOKS ASSOCIATES, PASADENA, CALIFORNIA

INTERSECTION CAPACITY UTILIZATION ANALYSIS

Location: Santa Anita Avenue and Brockway Street/!-10 Ramps **City:** El Monte
Project No.: EBA2014-07 **Analyzed By:** MYR **File Name:** 2014-07-03 5

Problem Condition: Future 2035 With Related Projects
Existing Geometric Configuration

Movement	Available Lanes		Peak Hour Volumes								Movement V/C Per Lane		Critical V/C	
			Existing		Other Proj.		Project		Study Vol.					
	No.	Cap.	AM	PM	AM	PM	AM	PM	AM	PM	AM	PM	AM	PM
N/B Left	1.0	1600	279	433	17	26	0	0	318	494	0.199	0.309	0.199	0.309
N/B Thru	2.0	3200	969	1484	127	174	0	0	1175	1778	0.367	0.556		
N/B Right	0.0	0	0	0	0	0	0	0	0	0	0.000	0.000		
S/B Left	0.0	0	0	0	0	0	0	0	0	0	0.000	0.000		
S/B Thru	3.0	4800	1164	950	142	167	0	0	1399	1194	0.292	0.249		0.249
S/B Right	1.0	1600	382	314	56	39	0	0	469	379	0.293	0.237	0.293	
E/B Left	0.0	0	0	0	0	0	0	0	0	0	0.000	0.000	0.000	0.000
E/B Thru	0.0	0	0	0	0	0	0	0	0	0	0.000	0.000		
E/B Right	0.0	0	0	0	0	0	0	0	0	0	0.000	0.000		
W/B Left	2.0	2880	474	306	29	18	0	0	541	349	0.188	0.121		
W/B Thru	1.0	1600	216	157	13	10	0	0	246	179	0.428	0.339	0.428	0.339
W/B Right	0.0	0	374	280	35	61	0	0	439	364	0.000	0.000		
	ANALYSIS RESULTS :								Sum Of Critical V/C:				0.921	0.897
									Lost Time:				0.100	0.100
									Total V/C:				1.021	0.997
									Level Of Service:				F	E

ASSUMPTIONS AND METHODOLOGY

Existing Conditions Year: 2020
Study Volume Year: 2035
Annual Growth Factor: 0.52 Percent

Lane Capacity
Single Through Lane = 1600 Vehicles Per Hour
Single Turn Lane = 1600 Vehicles Per Hour
Dual Turn Lane = 2880 Vehicles Per Hour

Level Of Service Definition

Total V/C	LOS
Under 0.605	A
0.605 - 0.704	B
0.705 - 0.804	C
0.805 - 0.904	D
0.905 - 1.004	E
Over 1.005	F

Lost time for signal Yellow and All red intervals: 0.10 of V/C Ratio

NOTES:

EVAN BROOKS ASSOCIATES, PASADENA, CALIFORNIA

INTERSECTION CAPACITY UTILIZATION ANALYSIS

Location: Santa Anita Avenue and Brockway Street/!-10 Ramps **City:** El Monte
Project No.: EBA2014-07 **Analyzed By:** MYR **File Name:** 2014-07-03 6

Problem Condition: Future 2035 Cumulative With Project Conditions
Existing Geometric Configuration

Movement	Available Lanes		Peak Hour Volumes								Movement V/C Per Lane		Critical V/C	
			Existing		Other Proj.		Project		Study Vol.					
	No.	Cap.	AM	PM	AM	PM	AM	PM	AM	PM	AM	PM	AM	PM
N/B Left	1.0	1600	279	433	17	26	0	0	318	494	0.199	0.309	0.199	0.309
N/B Thru	2.0	3200	969	1484	127	174	67	245	1242	2023	0.388	0.632		
N/B Right	0.0	0	0	0	0	0	0	0	0	0	0.000	0.000		
S/B Left	0.0	0	0	0	0	0	0	0	0	0	0.000	0.000		
S/B Thru	3.0	4800	1164	950	142	167	104	119	1503	1314	0.313	0.274		
S/B Right	1.0	1600	382	314	56	39	124	141	593	519	0.371	0.325	0.371	0.325
E/B Left	0.0	0	0	0	0	0	0	0	0	0	0.000	0.000	0.000	0.000
E/B Thru	0.0	0	0	0	0	0	0	0	0	0	0.000	0.000		
E/B Right	0.0	0	0	0	0	0	0	0	0	0	0.000	0.000		
W/B Left	2.0	2880	474	306	29	18	0	0	541	349	0.188	0.121		
W/B Thru	1.0	1600	216	157	13	10	0	0	246	179	0.453	0.424	0.453	0.424
W/B Right	0.0	0	374	280	35	61	39	135	478	499	0.000	0.000		
	ANALYSIS RESULTS :								Sum Of Critical V/C:				1.023	1.057
									Lost Time:				0.100	0.100
									Total V/C:				1.123	1.157
									Level Of Service:				F	F

ASSUMPTIONS AND METHODOLOGY

Existing Conditions Year: 2020
Study Volume Year: 2035
Annual Growth Factor: 0.52 Percent

Lane Capacity
Single Through Lane = 1600 Vehicles Per Hour
Single Turn Lane = 1600 Vehicles Per Hour
Dual Turn Lane = 2880 Vehicles Per Hour

Level Of Service Definition

Total V/C	LOS
Under 0.605	A
0.605 - 0.704	B
0.705 - 0.804	C
0.805 - 0.904	D
0.905 - 1.004	E
Over 1.005	F

Lost time for signal Yellow and All red intervals: 0.10 of V/C Ratio

NOTES:

EVAN BROOKS ASSOCIATES, PASADENA, CALIFORNIA

INTERSECTION CAPACITY UTILIZATION ANALYSIS

Location: Santa Anita Avenue and Asher Street/!-10 EB Ramps **City:** El Monte
Project No.: EBA2014-07 **Analyzed By:** MYR **File Name:** 2014-07-04 5

Problem Condition: Future 2035 With Related Projects
Existing Geometric Configuration

Movement	Available Lanes		Peak Hour Volumes								Movement V/C Per Lane		Critical V/C	
			Existing		Other Proj.		Project		Study Vol.					
	No.	Cap.	AM	PM	AM	PM	AM	PM	AM	PM	AM	PM	AM	PM
N/B Left	0.0	0	0	0	0	0	0	0	0	0	0.000	0.000		
N/B Thru	3.5	5600	804	1294	109	127	0	0	978	1526	0.175	0.272		0.272
N/B Right	0.5	800	315	186	19	12	0	0	360	212	0.450	0.265	0.450	
S/B Left	1.0	1600	334	281	57	46	0	0	418	350	0.261	0.219	0.261	0.219
S/B Thru	2.0	3200	1283	1059	112	145	0	0	1499	1289	0.468	0.403		
S/B Right	0.0	0	0	0	0	0	0	0	0	0	0.000	0.000		
E/B Left	1.5	2400	402	637	32	74	0	0	467	763	0.195	0.318		
E/B Thru	0.5	0	100	153	6	10	0	0	114	175	0.000	0.000		
E/B Right	1.0	1600	398	464	24	28	0	0	454	530	0.284	0.331	0.284	0.331
W/B Left	0.0	0	0	0	0	0	0	0	0	0	0.000	0.000	0.000	0.000
W/B Thru	0.0	0	0	0	0	0	0	0	0	0	0.000	0.000		
W/B Right	0.0	0	0	0	0	0	0	0	0	0	0.000	0.000		
	ANALYSIS RESULTS :								Sum Of Critical V/C:				0.995	0.822
									Lost Time:				0.100	0.100
									Total V/C:				1.095	0.922
									Level Of Service:				F	E

ASSUMPTIONS AND METHODOLOGY

Existing Conditions Year: 2020
Study Volume Year: 2035
Annual Growth Factor: 0.52 Percent

Lane Capacity
Single Through Lane = 1600 Vehicles Per Hour
Single Turn Lane = 1600 Vehicles Per Hour
Dual Turn Lane = 2880 Vehicles Per Hour

Level Of Service Definition

Total V/C	LOS
Under 0.605	A
0.605 - 0.704	B
0.705 - 0.804	C
0.805 - 0.904	D
0.905 - 1.004	E
Over 1.005	F

Lost time for signal Yellow and All red intervals: 0.10 of V/C Ratio

NOTES:

EVAN BROOKS ASSOCIATES, PASADENA, CALIFORNIA

INTERSECTION CAPACITY UTILIZATION ANALYSIS

Location: Santa Anita Avenue and Asher Street/!-10 EB Ramps **City:** El Monte
Project No.: EBA2014-07 **Analyzed By:** MYR **File Name:** 2014-07-04 6

Problem Condition: Future 2035 Cumulative With Project Conditions
Existing Geometric Configuration

Movement	Available Lanes		Peak Hour Volumes								Movement V/C Per Lane		Critical V/C	
			Existing		Other Proj.		Project		Study Vol.					
	No.	Cap.	AM	PM	AM	PM	AM	PM	AM	PM	AM	PM	AM	PM
N/B Left	0.0	0	0	0	0	0	0	0	0	0	0.000	0.000		
N/B Thru	3.5	5600	804	1294	109	127	16	55	994	1581	0.177	0.282		0.282
N/B Right	0.5	800	315	186	19	12	0	0	360	212	0.450	0.265	0.450	
S/B Left	1.0	1600	334	281	57	46	79	92	497	442	0.311	0.276	0.311	0.276
S/B Thru	2.0	3200	1283	1059	112	145	31	35	1530	1324	0.478	0.414		
S/B Right	0.0	0	0	0	0	0	0	0	0	0	0.000	0.000		
E/B Left	1.5	2400	402	637	32	74	63	214	530	977	0.221	0.407		0.407
E/B Thru	0.5	0	100	153	6	10	0	0	114	175	0.000	0.000		
E/B Right	1.0	1600	398	464	24	28	0	0	454	530	0.284	0.331	0.284	
W/B Left	0.0	0	0	0	0	0	0	0	0	0	0.000	0.000	0.000	
W/B Thru	0.0	0	0	0	0	0	0	0	0	0	0.000	0.000		0.000
W/B Right	0.0	0	0	0	0	0	0	0	0	0	0.000	0.000		0.000
ANALYSIS RESULTS :									Sum Of Critical V/C:				1.044	0.965
									Lost Time:				0.100	0.100
									Total V/C:				1.144	1.065
									Level Of Service:				F	F

ASSUMPTIONS AND METHODOLOGY

Existing Conditions Year: 2020
Study Volume Year: 2035
Annual Growth Factor: 0.52 Percent

Lane Capacity
Single Through Lane = 1600 Vehicles Per Hour
Single Turn Lane = 1600 Vehicles Per Hour
Dual Turn Lane = 2880 Vehicles Per Hour

Level Of Service Definition

Total V/C	LOS
Under 0.605	A
0.605 - 0.704	B
0.705 - 0.804	C
0.805 - 0.904	D
0.905 - 1.004	E
Over 1.005	F

Lost time for signal Yellow and All red intervals: 0.10 of V/C Ratio

NOTES:

EVAN BROOKS ASSOCIATES, PASADENA, CALIFORNIA

INTERSECTION CAPACITY UTILIZATION ANALYSIS

Location: Tyler Avenue and Valley Boulevard **City:** El Monte
Project No.: EBA2014-07 **Analyzed By:** MYR **File Name:** 2014-07-05 5

Problem Condition: Future 2035 With Related Projects
Existing Geometric Configuration

Movement	Available Lanes		Peak Hour Volumes								Movement V/C Per Lane		Critical V/C	
			Existing		Other Proj.		Project		Study Vol.					
	No.	Cap.	AM	PM	AM	PM	AM	PM	AM	PM	AM	PM	AM	PM
N/B Left	1.0	1600	89	130	17	30	0	0	112	171	0.070	0.107	0.070	0.107
N/B Thru	2.0	3200	195	221	12	14	0	0	223	252	0.084	0.107		
N/B Right	0.0	0	41	79	2	4	0	0	46	90	0.000	0.000		
S/B Left	1.0	1600	151	101	9	6	0	0	172	116	0.108	0.072		
S/B Thru	2.0	3200	315	305	19	19	0	0	360	349	0.159	0.142	0.159	0.142
S/B Right	0.0	0	126	82	14	16	0	0	150	105	0.000	0.000		
E/B Left	1.0	1600	45	59	7	16	0	0	56	79	0.035	0.050	0.035	0.050
E/B Thru	2.0	3200	484	529	75	135	0	0	598	707	0.210	0.273		
E/B Right	0.0	0	54	127	16	29	0	0	74	166	0.000	0.000		
W/B Left	1.0	1600	30	127	2	8	0	0	34	145	0.021	0.091		
W/B Thru	2.0	3200	986	889	123	139	0	0	1190	1101	0.419	0.370	0.419	0.370
W/B Right	0.0	0	132	73	8	4	0	0	151	83	0.000	0.000		
	ANALYSIS RESULTS :								Sum Of Critical V/C:				0.683	0.668
									Lost Time:				0.100	0.100
									Total V/C:				0.783	0.768
									Level Of Service:				C	C

ASSUMPTIONS AND METHODOLOGY

Existing Conditions Year: 2020
Study Volume Year: 2035
Annual Growth Factor: 0.52 Percent

Lane Capacity
Single Through Lane = 1600 Vehicles Per Hour
Single Turn Lane = 1600 Vehicles Per Hour
Dual Turn Lane = 2880 Vehicles Per Hour

Level Of Service Definition

Total V/C	LOS
Under 0.605	A
0.605 - 0.704	B
0.705 - 0.804	C
0.805 - 0.904	D
0.905 - 1.004	E
Over 1.005	F

Lost time for signal Yellow and All red intervals: 0.10 of V/C Ratio

NOTES:

EVAN BROOKS ASSOCIATES, PASADENA, CALIFORNIA

INTERSECTION CAPACITY UTILIZATION ANALYSIS

Location: Tyler Avenue and Valley Boulevard **City:** El Monte
Project No.: EBA2014-07 **Analyzed By:** MYR **File Name:** 2014-07-05 6

Problem Condition: Future 2035 Cumulative With Project Conditions
Existing Geometric Configuration

Movement	Available Lanes		Peak Hour Volumes								Movement V/C Per Lane		Critical V/C	
			Existing		Other Proj.		Project		Study Vol.					
	No.	Cap.	AM	PM	AM	PM	AM	PM	AM	PM	AM	PM	AM	PM
N/B Left	1.0	1600	89	130	17	30	2	6	114	176	0.072	0.110	0.072	0.110
N/B Thru	2.0	3200	195	221	12	14	9	24	232	276	0.087	0.114		
N/B Right	0.0	0	41	79	2	4	0	0	46	90	0.000	0.000		
S/B Left	1.0	1600	151	101	9	6	0	0	172	116	0.108	0.072		
S/B Thru	2.0	3200	315	305	19	19	21	31	381	380	0.171	0.158	0.171	0.158
S/B Right	0.0	0	126	82	14	16	15	19	165	125	0.000	0.000		
E/B Left	1.0	1600	45	59	7	16	3	5	59	84	0.037	0.053	0.037	0.053
E/B Thru	2.0	3200	484	529	75	135	58	66	656	773	0.231	0.296		
E/B Right	0.0	0	54	127	16	29	8	9	82	175	0.000	0.000		
W/B Left	1.0	1600	30	127	2	8	10	37	44	182	0.028	0.114		
W/B Thru	2.0	3200	986	889	123	139	37	94	1227	1195	0.432	0.406	0.432	0.406
W/B Right	0.0	0	132	73	8	4	6	23	157	105	0.000	0.000		
	ANALYSIS RESULTS :								Sum Of Critical V/C:				0.711	0.727
									Lost Time:				0.100	0.100
									Total V/C:				0.811	0.827
									Level Of Service:				D	D

ASSUMPTIONS AND METHODOLOGY

Existing Conditions Year: 2020
Study Volume Year: 2035
Annual Growth Factor: 0.52 Percent

Lane Capacity
Single Through Lane = 1600 Vehicles Per Hour
Single Turn Lane = 1600 Vehicles Per Hour
Dual Turn Lane = 2880 Vehicles Per Hour

Level Of Service Definition

Total V/C	LOS
Under 0.605	A
0.605 - 0.704	B
0.705 - 0.804	C
0.805 - 0.904	D
0.905 - 1.004	E
Over 1.005	F

Lost time for signal Yellow and All red intervals: 0.10 of V/C Ratio

NOTES:

EVAN BROOKS ASSOCIATES, PASADENA, CALIFORNIA

INTERSECTION CAPACITY UTILIZATION ANALYSIS

Location: Tyler Avenue and Ramona Boulevard **City:** El Monte
Project No.: EBA2014-07 **Analyzed By:** MYR **File Name:** 2014-07-06 5

Problem Condition: Future 2035 With Related Projects
Existing Geometric Configuration

Movement	Available Lanes		Peak Hour Volumes								Movement V/C Per Lane		Critical V/C	
			Existing		Other Proj.		Project		Study Vol.					
	No.	Cap.	AM	PM	AM	PM	AM	PM	AM	PM	AM	PM	AM	PM
N/B Left	1.0	1600	63	28	0	0	0	0	68	30	0.043	0.019	0.043	0.019
N/B Thru	2.0	3200	192	378	31	48	0	0	238	456	0.109	0.202		
N/B Right	0.0	0	101	176	0	0	0	0	109	190	0.000	0.000		
S/B Left	1.0	1600	58	38	0	0	0	0	62	41	0.039	0.026		
S/B Thru	1.0	1600	221	270	37	56	0	0	276	348	0.173	0.217	0.173	0.217
S/B Right	1.0	1600	101	95	0	0	0	0	109	103	0.031	0.065		
E/B Left	1.0	1600	55	97	0	0	0	0	60	104	0.037	0.065	0.037	
E/B Thru	2.0	3200	232	599	0	0	0	0	251	647	0.088	0.221		0.221
E/B Right	0.0	0	28	54	0	0	0	0	30	59	0.000	0.000		
W/B Left	1.0	1600	77	115	0	0	0	0	83	124	0.052	0.078		0.078
W/B Thru	2.0	3200	498	341	0	0	0	0	538	368	0.184	0.135	0.184	
W/B Right	0.0	0	47	58	0	0	0	0	50	62	0.000	0.000		
	ANALYSIS RESULTS :								Sum Of Critical V/C:				0.436	0.535
									Lost Time:				0.100	0.100
									Total V/C:				0.536	0.635
									Level Of Service:				A	B

ASSUMPTIONS AND METHODOLOGY

Existing Conditions Year: 2020
Study Volume Year: 2035
Annual Growth Factor: 0.52 Percent

Lane Capacity
Single Through Lane = 1600 Vehicles Per Hour
Single Turn Lane = 1600 Vehicles Per Hour
Dual Turn Lane = 2880 Vehicles Per Hour

Level Of Service Definition

Total V/C	LOS
Under 0.605	A
0.605 - 0.704	B
0.705 - 0.804	C
0.805 - 0.904	D
0.905 - 1.004	E
Over 1.005	F

Lost time for signal Yellow and All red intervals: 0.10 of V/C Ratio

NOTES:

EVAN BROOKS ASSOCIATES, PASADENA, CALIFORNIA

INTERSECTION CAPACITY UTILIZATION ANALYSIS

Location: Tyler Avenue and Ramona Boulevard **City:** El Monte
Project No.: EBA2014-07 **Analyzed By:** MYR **File Name:** 2014-07-06 6

Problem Condition: Future 2035 Cumulative With Project Conditions
Existing Geometric Configuration

Movement	Available Lanes		Peak Hour Volumes								Movement V/C Per Lane		Critical V/C	
			Existing		Other Proj.		Project		Study Vol.					
	No.	Cap.	AM	PM	AM	PM	AM	PM	AM	PM	AM	PM	AM	PM
N/B Left	1.0	1600	63	28	0	0	2	7	70	38	0.044	0.024	0.044	
N/B Thru	2.0	3200	192	378	31	48	7	24	245	480	0.111	0.209		0.209
N/B Right	0.0	0	101	176	0	0	0	0	109	190	0.000	0.000		
S/B Left	1.0	1600	58	38	0	0	22	28	84	69	0.053	0.043		0.043
S/B Thru	1.0	1600	221	270	37	56	12	14	288	362	0.180	0.226	0.180	
S/B Right	1.0	1600	101	95	0	0	5	9	114	112	0.032	0.001		
E/B Left	1.0	1600	55	97	0	0	3	6	63	111	0.039	0.069	0.039	
E/B Thru	2.0	3200	232	599	0	0	36	50	287	698	0.100	0.238		0.238
E/B Right	0.0	0	28	54	0	0	4	5	34	64	0.000	0.000		
W/B Left	1.0	1600	77	115	0	0	0	0	83	124	0.052	0.078		0.078
W/B Thru	2.0	3200	498	341	0	0	24	79	562	447	0.196	0.176	0.196	
W/B Right	0.0	0	47	58	0	0	14	52	64	114	0.000	0.000		
	ANALYSIS RESULTS :								Sum Of Critical V/C:				0.459	0.568
									Lost Time:				0.100	0.100
									Total V/C:				0.559	0.668
									Level Of Service:				A	B

ASSUMPTIONS AND METHODOLOGY

Existing Conditions Year: 2020
Study Volume Year: 2035
Annual Growth Factor: 0.52 Percent

Lane Capacity
Single Through Lane = 1600 Vehicles Per Hour
Single Turn Lane = 1600 Vehicles Per Hour
Dual Turn Lane = 2880 Vehicles Per Hour

Level Of Service Definition

Total V/C	LOS
Under 0.605	A
0.605 - 0.704	B
0.705 - 0.804	C
0.805 - 0.904	D
0.905 - 1.004	E
Over 1.005	F

Lost time for signal Yellow and All red intervals: 0.10 of V/C Ratio

NOTES:

EVAN BROOKS ASSOCIATES, PASADENA, CALIFORNIA

INTERSECTION CAPACITY UTILIZATION ANALYSIS

Location: Valley Boulevard and Ramona Boulevard **City:** El Monte
Project No.: EBA2014-07 **Analyzed By:** MYR **File Name:** 2014-07-07 5

Problem Condition: Future 2035 With Related Projects
Existing Geometric Configuration

Movement	Available Lanes		Peak Hour Volumes								Movement V/C Per Lane		Critical V/C	
			Existing		Other Proj.		Project		Study Vol.					
	No.	Cap.	AM	PM	AM	PM	AM	PM	AM	PM	AM	PM	AM	PM
N/B Left	1.0	1600	201	207	12	12	0	0	229	236	0.143	0.148		
N/B Thru	2.0	3200	755	465	72	65	0	0	888	568	0.278	0.177	0.278	0.177
N/B Right	1.0	1600	33	60	2	4	0	0	38	68	0.024	0.018		
S/B Left	1.0	1600	177	534	38	90	0	0	230	667	0.144	0.417	0.144	0.417
S/B Thru	2.0	3200	488	775	48	90	0	0	575	928	0.180	0.290		
S/B Right	1.0	1600	11	15	0	0	0	0	12	17	0.007	0.010		
E/B Left	1.0	1600	12	21	0	2	0	0	13	25	0.008	0.015	0.008	
E/B Thru	2.0	3200	165	492	11	31	0	0	190	563	0.086	0.203		0.203
E/B Right	0.0	0	72	68	7	14	0	0	84	88	0.000	0.000		
W/B Left	1.0	1600	58	34	5	3	0	0	67	40	0.042	0.025		0.025
W/B Thru	2.0	3200	497	248	31	16	0	0	569	284	0.333	0.176	0.333	
W/B Right	0.0	0	406	210	59	53	0	0	498	281	0.000	0.000		
	ANALYSIS RESULTS :								Sum Of Critical V/C:				0.763	0.822
									Lost Time:				0.100	0.100
									Total V/C:				0.863	0.922
									Level Of Service:				D	E

ASSUMPTIONS AND METHODOLOGY

Existing Conditions Year: 2020
Study Volume Year: 2035
Annual Growth Factor: 0.52 Percent

Lane Capacity
Single Through Lane = 1600 Vehicles Per Hour
Single Turn Lane = 1600 Vehicles Per Hour
Dual Turn Lane = 2880 Vehicles Per Hour

Level Of Service Definition

Total V/C	LOS
Under 0.605	A
0.605 - 0.704	B
0.705 - 0.804	C
0.805 - 0.904	D
0.905 - 1.004	E
Over 1.005	F

Lost time for signal Yellow and All red intervals: 0.10 of V/C Ratio

NOTES:

EVAN BROOKS ASSOCIATES, PASADENA, CALIFORNIA

INTERSECTION CAPACITY UTILIZATION ANALYSIS

Location: Valley Boulevard and Ramona Boulevard **City:** El Monte
Project No.: EBA2014-07 **Analyzed By:** MYR **File Name:** 2014-07-07 6

Problem Condition: Future 2035 Cumulative With Project Conditions
Existing Geometric Configuration

Movement	Available Lanes		Peak Hour Volumes								Movement V/C Per Lane		Critical V/C	
			Existing		Other Proj.		Project		Study Vol.					
	No.	Cap.	AM	PM	AM	PM	AM	PM	AM	PM	AM	PM	AM	PM
N/B Left	1.0	1600	201	207	12	12	3	11	232	247	0.145	0.155		
N/B Thru	2.0	3200	755	465	72	65	16	20	904	588	0.283	0.184	0.283	0.184
N/B Right	1.0	1600	33	60	2	4	40	50	78	119	0.049	0.074		
S/B Left	1.0	1600	177	534	38	90	0	0	230	667	0.144	0.417	0.144	0.417
S/B Thru	2.0	3200	488	775	48	90	14	52	589	980	0.184	0.306		
S/B Right	1.0	1600	11	15	0	0	4	13	16	30	0.010	0.019		
E/B Left	1.0	1600	12	21	0	2	10	11	23	36	0.014	0.023	0.014	
E/B Thru	2.0	3200	165	492	11	31	100	108	290	671	0.118	0.239		0.239
E/B Right	0.0	0	72	68	7	14	4	5	88	93	0.000	0.000		
W/B Left	1.0	1600	58	34	5	3	31	115	98	155	0.061	0.097		0.097
W/B Thru	2.0	3200	497	248	31	16	58	193	627	477	0.351	0.237	0.351	
W/B Right	0.0	0	406	210	59	53	0	0	498	281	0.000	0.000		
	ANALYSIS RESULTS :								Sum Of Critical V/C:				0.792	0.936
									Lost Time:				0.100	0.100
									Total V/C:				0.892	1.036
									Level Of Service:				D	F

ASSUMPTIONS AND METHODOLOGY

Existing Conditions Year: 2020
Study Volume Year: 2035
Annual Growth Factor: 0.52 Percent

Lane Capacity
Single Through Lane = 1600 Vehicles Per Hour
Single Turn Lane = 1600 Vehicles Per Hour
Dual Turn Lane = 2880 Vehicles Per Hour

Level Of Service Definition

Total V/C	LOS
Under 0.605	A
0.605 - 0.704	B
0.705 - 0.804	C
0.805 - 0.904	D
0.905 - 1.004	E
Over 1.005	F

Lost time for signal Yellow and All red intervals: 0.10 of V/C Ratio

NOTES:

EVAN BROOKS ASSOCIATES, PASADENA, CALIFORNIA

INTERSECTION CAPACITY UTILIZATION ANALYSIS

Location: Peck Road and Valley Boulevard **City:** El Monte
Project No.: EBA2014-07 **Analyzed By:** MYR **File Name:** 2014-07-08 5

Problem Condition: Future 2035 With Related Projects
Existing Geometric Configuration

Movement	Available Lanes		Peak Hour Volumes								Movement V/C Per Lane		Critical V/C	
			Existing		Other Proj.		Project		Study Vol.					
	No.	Cap.	AM	PM	AM	PM	AM	PM	AM	PM	AM	PM	AM	PM
N/B Left	1.0	1600	214	38	19	13	0	0	250	55	0.156	0.034	0.156	
N/B Thru	3.0	4800	697	596	43	37	0	0	796	681	0.243	0.207		0.207
N/B Right	0.0	0	323	273	20	16	0	0	369	312	0.000	0.000		
S/B Left	1.0	1600	201	197	17	17	0	0	234	230	0.146	0.144		0.144
S/B Thru	2.0	3200	905	853	56	52	0	0	1034	974	0.323	0.304	0.323	
S/B Right	1.0	1600	206	153	12	10	0	0	235	175	0.094	0.021		
E/B Left	1.0	1600	74	124	4	8	0	0	84	142	0.052	0.088	0.052	
E/B Thru	2.0	3200	480	1301	52	106	0	0	572	1512	0.179	0.473		0.473
E/B Right	1.0	1600	77	350	9	33	0	0	92	412	0.058	0.223		
W/B Left	1.0	1600	57	208	4	12	0	0	65	237	0.041	0.148		0.148
W/B Thru	2.0	3200	923	874	71	88	0	0	1070	1033	0.334	0.323	0.334	
W/B Right	1.0	1600	199	165	16	16	0	0	231	195	0.144	0.122		
	ANALYSIS RESULTS :								Sum Of Critical V/C:				0.866	0.971
									Lost Time:				0.100	0.100
									Total V/C:				0.966	1.071
									Level Of Service:				E	F

ASSUMPTIONS AND METHODOLOGY

Existing Conditions Year: 2020
Study Volume Year: 2035
Annual Growth Factor: 0.52 Percent

Lane Capacity
Single Through Lane = 1600 Vehicles Per Hour
Single Turn Lane = 1600 Vehicles Per Hour
Dual Turn Lane = 2880 Vehicles Per Hour

Level Of Service Definition

Total V/C	LOS
Under 0.605	A
0.605 - 0.704	B
0.705 - 0.804	C
0.805 - 0.904	D
0.905 - 1.004	E
Over 1.005	F

Lost time for signal Yellow and All red intervals: 0.10 of V/C Ratio

NOTES:

EVAN BROOKS ASSOCIATES, PASADENA, CALIFORNIA

INTERSECTION CAPACITY UTILIZATION ANALYSIS

Location: Peck Road and Valley Boulevard **City:** El Monte
Project No.: EBA2014-07 **Analyzed By:** MYR **File Name:** 2014-07-08 6

Problem Condition: Future 2035 Cumulative With Project Conditions
Existing Geometric Configuration

Movement	Available Lanes		Peak Hour Volumes								Movement V/C Per Lane		Critical V/C	
			Existing		Other Proj.		Project		Study Vol.					
	No.	Cap.	AM	PM	AM	PM	AM	PM	AM	PM	AM	PM	AM	PM
N/B Left	1.0	1600	214	38	19	13	24	77	274	132	0.171	0.083	0.171	0.083
N/B Thru	3.0	4800	697	596	43	37	0	0	796	681	0.243	0.207		
N/B Right	0.0	0	323	273	20	16	0	0	369	312	0.000	0.000		
S/B Left	1.0	1600	201	197	17	17	0	0	234	230	0.146	0.144		
S/B Thru	2.0	3200	905	853	56	52	0	0	1034	974	0.323	0.304	0.323	0.304
S/B Right	1.0	1600	206	153	12	10	14	50	249	225	0.090	0.036		
E/B Left	1.0	1600	74	124	4	8	21	25	105	167	0.066	0.104	0.066	
E/B Thru	2.0	3200	480	1301	52	106	86	101	658	1613	0.205	0.504		0.504
E/B Right	1.0	1600	77	350	9	33	51	55	143	467	0.090	0.210		
W/B Left	1.0	1600	57	208	4	12	0	0	65	237	0.041	0.148		0.148
W/B Thru	2.0	3200	923	874	71	88	57	202	1127	1235	0.352	0.386	0.352	
W/B Right	1.0	1600	199	165	16	16	0	0	231	195	0.144	0.122		
	ANALYSIS RESULTS :								Sum Of Critical V/C:				0.912	1.039
									Lost Time:				0.100	0.100
									Total V/C:				1.012	1.139
									Level Of Service:				F	F

ASSUMPTIONS AND METHODOLOGY

Existing Conditions Year: 2020
Study Volume Year: 2035
Annual Growth Factor: 0.52 Percent

Lane Capacity
Single Through Lane = 1600 Vehicles Per Hour
Single Turn Lane = 1600 Vehicles Per Hour
Dual Turn Lane = 2880 Vehicles Per Hour

Level Of Service Definition

Total V/C	LOS
Under 0.605	A
0.605 - 0.704	B
0.705 - 0.804	C
0.805 - 0.904	D
0.905 - 1.004	E
Over 1.005	F

Lost time for signal Yellow and All red intervals: 0.10 of V/C Ratio

NOTES:

EVAN BROOKS ASSOCIATES, PASADENA, CALIFORNIA

INTERSECTION CAPACITY UTILIZATION ANALYSIS

Location: Santa Anita Avenue and Valley Mall **City:** El Monte
Project No.: EBA2014-07 **Analyzed By:** MYR **File Name:** 2014-07-09 5

Problem Condition: Future 2035 With Related Projects
Existing Geometric Configuration

Movement	Available Lanes		Peak Hour Volumes								Movement V/C Per Lane		Critical V/C	
			Existing		Other Proj.		Project		Study Vol.					
	No.	Cap.	AM	PM	AM	PM	AM	PM	AM	PM	AM	PM	AM	PM
N/B Left	0.0	0	0	0	0	0	0	0	0	0	0.000	0.000		
N/B Thru	3.0	4800	1183	1387	216	190	0	0	1495	1689	0.319	0.373	0.319	0.373
N/B Right	0.0	0	34	92	0	0	0	0	36	100	0.000	0.000		
S/B Left	1.0	1600	34	13	0	0	0	0	36	14	0.023	0.009	0.023	0.009
S/B Thru	3.0	4800	1002	730	101	218	0	0	1184	1007	0.247	0.210		
S/B Right	0.0	0	0	0	0	0	0	0	0	0	0.000	0.000		
E/B Left	0.0	0	2	0	0	0	0	0	2	0	0.000	0.000		
E/B Thru	1.0	1600	148	367	0	0	0	0	160	396	0.101	0.248		
E/B Right	1.0	1600	475	475	0	0	0	0	513	513	0.321	0.321	0.321	0.321
W/B Left	0.0	0	16	117	0	0	0	0	17	126	0.000	0.000	0.000	0.000
W/B Thru	1.0	1600	0	0	0	0	0	0	0	0	0.042	0.159		
W/B Right	0.0	0	46	119	0	0	0	0	50	128	0.000	0.000		
	ANALYSIS RESULTS :								Sum Of Critical V/C:				0.662	0.702
									Lost Time:				0.100	0.100
									Total V/C:				0.762	0.802
									Level Of Service:				C	C

ASSUMPTIONS AND METHODOLOGY

Existing Conditions Year: 2020
Study Volume Year: 2035
Annual Growth Factor: 0.52 Percent

Lane Capacity
Single Through Lane = 1600 Vehicles Per Hour
Single Turn Lane = 1600 Vehicles Per Hour
Dual Turn Lane = 2880 Vehicles Per Hour

Level Of Service Definition

Total V/C	LOS
Under 0.605	A
0.605 - 0.704	B
0.705 - 0.804	C
0.805 - 0.904	D
0.905 - 1.004	E
Over 1.005	F

Lost time for signal Yellow and All red intervals: 0.10 of V/C Ratio

NOTES:

EVAN BROOKS ASSOCIATES, PASADENA, CALIFORNIA

INTERSECTION CAPACITY UTILIZATION ANALYSIS

Location: Santa Anita Avenue and Valley Mall **City:** El Monte
Project No.: EBA2014-07 **Analyzed By:** MYR **File Name:** 2014-07-09 6

Problem Condition: Future 2035 Cumulative With Project Conditions
Existing Geometric Configuration

Movement	Available Lanes		Peak Hour Volumes								Movement V/C Per Lane		Critical V/C	
			Existing		Other Proj.		Project		Study Vol.					
	No.	Cap.	AM	PM	AM	PM	AM	PM	AM	PM	AM	PM	AM	PM
N/B Left	0.0	0	0	0	0	0	0	0	0	0	0.000	0.000		
N/B Thru	3.0	4800	1183	1387	216	190	106	268	1601	1957	0.341	0.428	0.341	0.428
N/B Right	0.0	0	34	92	0	0	0	0	36	100	0.000	0.000		
S/B Left	1.0	1600	34	13	0	0	0	0	36	14	0.023	0.009	0.023	0.009
S/B Thru	3.0	4800	1002	730	101	218	148	185	1332	1192	0.278	0.248		
S/B Right	0.0	0	0	0	0	0	0	0	0	0	0.000	0.000		
E/B Left	0.0	0	2	0	0	0	0	0	2	0	0.000	0.000		
E/B Thru	1.0	1600	148	367	0	0	0	0	160	396	0.101	0.248		
E/B Right	1.0	1600	475	475	0	0	9	34	522	547	0.326	0.342	0.326	0.342
W/B Left	0.0	0	16	117	0	0	0	0	17	126	0.000	0.000	0.000	0.000
W/B Thru	1.0	1600	0	0	0	0	0	0	0	0	0.042	0.159		
W/B Right	0.0	0	46	119	0	0	0	0	50	128	0.000	0.000		
	ANALYSIS RESULTS :								Sum Of Critical V/C:				0.690	0.779
									Lost Time:				0.100	0.100
									Total V/C:				0.790	0.879
									Level Of Service:				C	D

ASSUMPTIONS AND METHODOLOGY

Existing Conditions Year: 2020
Study Volume Year: 2035
Annual Growth Factor: 0.52 Percent

Lane Capacity
Single Through Lane = 1600 Vehicles Per Hour
Single Turn Lane = 1600 Vehicles Per Hour
Dual Turn Lane = 2880 Vehicles Per Hour

Level Of Service Definition

Total V/C	LOS
Under 0.605	A
0.605 - 0.704	B
0.705 - 0.804	C
0.805 - 0.904	D
0.905 - 1.004	E
Over 1.005	F

Lost time for signal Yellow and All red intervals: 0.10 of V/C Ratio

NOTES:

EVAN BROOKS ASSOCIATES, PASADENA, CALIFORNIA

FUTURE 2020 AND 2035 LEVEL OF SERVICE ANALYSIS

WITH MITIGATION

INTERSECTION CAPACITY UTILIZATION ANALYSIS

Location: Santa Anita Avenue and Valley Boulevard **City:** El Monte
Project No.: EBA2014-07 **Analyzed By:** MYR **File Name:** 2014-07-01 7

Problem Condition: Future 2020 Cumulative With Project Conditions
Mitigated Geometric Lane Configuration
(Add 1 S/B Right and 1 W/B Thru Lane)

Movement	Available Lanes		Peak Hour Volumes								Movement V/C Per Lane		Critical V/C	
			Existing		Other Proj.		Project		Study Vol.					
	No.	Cap.	AM	PM	AM	PM	AM	PM	AM	PM	AM	PM	AM	PM
N/B Left	2.0	2880	495	411	127	88	28	35	667	548	0.231	0.190	0.231	0.190
N/B Thru	3.0	4800	580	1058	70	87	31	79	700	1259	0.167	0.302		
N/B Right	0.0	0	41	76	19	15	42	95	104	190	0.000	0.000		
S/B Left	1.0	1600	62	60	4	4	4	10	72	75	0.045	0.047		
S/B Thru	3.0	4800	877	648	63	77	40	70	1009	816	0.210	0.170	0.210	0.170
S/B Right	1.0	1600	353	137	31	22	0	0	396	164	0.183	0.103		
E/B Left	1.0	1600	88	222	12	28	0	0	102	257	0.064	0.161	0.064	
E/B Thru	2.0	3200	478	705	77	170	21	68	592	966	0.198	0.340		0.340
E/B Right	0.0	0	8	5	32	117	0	0	41	122	0.000	0.000		
W/B Left	2.0	2880	33	104	6	24	39	58	79	190	0.027	0.066		0.066
W/B Thru	3.0	4800	1009	483	120	131	42	45	1205	675	0.260	0.156	0.260	
W/B Right	0.0	0	25	56	2	4	14	14	41	75	0.000	0.000		
	ANALYSIS RESULTS :								Sum Of Critical V/C:				0.765	0.766
									Lost Time:				0.100	0.100
									Total V/C:				0.865	0.866
									Level Of Service:				D	D

ASSUMPTIONS AND METHODOLOGY

Existing Conditions Year: 2016
Study Volume Year: 2020
Annual Growth Factor: 0.82 Percent

Lane Capacity
Single Through Lane = 1600 Vehicles Per Hour
Single Turn Lane = 1600 Vehicles Per Hour
Dual Turn Lane = 2880 Vehicles Per Hour

Level Of Service Definition

Total V/C	LOS
Under 0.605	A
0.605 - 0.704	B
0.705 - 0.804	C
0.805 - 0.904	D
0.905 - 1.004	E
Over 1.005	F

Lost time for signal Yellow and All red intervals: 0.10 of V/C Ratio

NOTES:

EVAN BROOKS ASSOCIATES, PASADENA, CALIFORNIA

INTERSECTION CAPACITY UTILIZATION ANALYSIS

Location: Santa Anita Avenue and Valley Boulevard **City:** El Monte
Project No.: EBA2014-07 **Analyzed By:** MYR **File Name:** 2014-07-01 8

Problem Condition: Future 2035 Cumulative With Project Conditions
Mitigated Geometric Lane Configuration
(Add 1 S/B Right and 1 W/B Thru Lane; Add 1 E/B Thru and 1 E/B Left lane)

Movement	Available Lanes		Peak Hour Volumes								Movement V/C Per Lane		Critical V/C	
			Existing		Other Proj.		Project		Study Vol.					
	No.	Cap.	AM	PM	AM	PM	AM	PM	AM	PM	AM	PM	AM	PM
N/B Left	2.0	2880	511	425	127	88	28	35	708	582	0.246	0.202	0.246	0.202
N/B Thru	3.0	4800	599	1093	70	87	31	79	748	1347	0.178	0.322		
N/B Right	0.0	0	43	79	19	15	42	95	107	196	0.000	0.000		
S/B Left	1.0	1600	64	62	4	4	4	10	77	80	0.048	0.050		
S/B Thru	3.0	4800	906	669	63	77	40	70	1083	870	0.226	0.181		0.181
S/B Right	1.0	1600	365	142	31	22	0	0	425	176	0.232	0.024	0.232	
E/B Left	2.0	2880	91	230	12	28	0	0	110	276	0.038	0.096	0.038	
E/B Thru	3.0	4800	494	728	77	170	21	68	632	1025	0.140	0.239		0.239
E/B Right	0.0	0	9	5	32	117	0	0	41	123	0.000	0.000		
W/B Left	2.0	2880	34	108	6	24	39	58	82	198	0.028	0.069		0.069
W/B Thru	3.0	4800	1043	499	120	131	42	45	1289	715	0.278	0.166	0.278	
W/B Right	0.0	0	26	58	2	4	14	14	43	80	0.000	0.000		
	ANALYSIS RESULTS :								Sum Of Critical V/C:				0.793	0.691
									Lost Time:				0.100	0.100
									Total V/C:				0.893	0.791
									Level Of Service:				D	C

ASSUMPTIONS AND METHODOLOGY

Existing Conditions Year: 2020
Study Volume Year: 2035
Annual Growth Factor: 0.52 Percent

Lane Capacity
Single Through Lane = 1600 Vehicles Per Hour
Single Turn Lane = 1600 Vehicles Per Hour
Dual Turn Lane = 2880 Vehicles Per Hour

Level Of Service Definition

Total V/C	LOS
Under 0.605	A
0.605 - 0.704	B
0.705 - 0.804	C
0.805 - 0.904	D
0.905 - 1.004	E
Over 1.005	F

Lost time for signal Yellow and All red intervals: 0.10 of V/C Ratio

NOTES:

EVAN BROOKS ASSOCIATES, PASADENA, CALIFORNIA

INTERSECTION CAPACITY UTILIZATION ANALYSIS

Location: Santa Anita Avenue and Brockway Street/!-10 Ramps **City:** El Monte
Project No.: EBA2014-07 **Analyzed By:** MYR **File Name:** 2014-07-03 7

Problem Condition: Future 2020 Cumulative With Project Conditions
Mitigated Geometric Lane Configuration
(Add 1 W/B Thru Plus RT Lane)

Movement	Available Lanes		Peak Hour Volumes								Movement V/C Per Lane		Critical V/C	
			Existing		Other Proj.		Project		Study Vol.					
	No.	Cap.	AM	PM	AM	PM	AM	PM	AM	PM	AM	PM	AM	PM
N/B Left	2.0	2880	270	419	17	26	0	0	296	459	0.103	0.159	0.103	
N/B Thru	2.0	3200	938	1436	127	174	67	245	1163	1903	0.363	0.595		0.595
N/B Right	0.0	0	0	0	0	0	0	0	0	0	0.000	0.000		
S/B Left	0.0	0	0	0	0	0	0	0	0	0	0.000	0.000		0.000
S/B Thru	3.0	4800	1126	920	142	167	104	119	1409	1237	0.294	0.258		
S/B Right	1.0	1600	370	304	56	39	124	141	563	494	0.352	0.309	0.352	
E/B Left	0.0	0	0	0	0	0	0	0	0	0	0.000	0.000	0.000	0.000
E/B Thru	0.0	0	0	0	0	0	0	0	0	0	0.000	0.000		
E/B Right	0.0	0	0	0	0	0	0	0	0	0	0.000	0.000		
W/B Left	2.0	2880	459	297	29	18	0	0	503	324	0.175	0.113		
W/B Thru	2.0	3200	209	152	13	10	0	0	229	167	0.211	0.201	0.211	0.201
W/B Right	0.0	0	362	271	35	61	39	135	448	476	0.000	0.000		
	ANALYSIS RESULTS :								Sum Of Critical V/C:				0.666	0.796
									Lost Time:				0.100	0.100
									Total V/C:				0.766	0.896
									Level Of Service:				C	D

ASSUMPTIONS AND METHODOLOGY

Existing Conditions Year: 2016
Study Volume Year: 2020
Annual Growth Factor: 0.82 Percent

Lane Capacity
Single Through Lane = 1600 Vehicles Per Hour
Single Turn Lane = 1600 Vehicles Per Hour
Dual Turn Lane = 2880 Vehicles Per Hour

Level Of Service Definition

Total V/C	LOS
Under 0.605	A
0.605 - 0.704	B
0.705 - 0.804	C
0.805 - 0.904	D
0.905 - 1.004	E
Over 1.005	F

Lost time for signal Yellow and All red intervals: 0.10 of V/C Ratio

NOTES:

EVAN BROOKS ASSOCIATES, PASADENA, CALIFORNIA

INTERSECTION CAPACITY UTILIZATION ANALYSIS

Location: Santa Anita Avenue and Brockway Street/!-10 Ramps **City:** El Monte
Project No.: EBA2014-07 **Analyzed By:** MYR **File Name:** 2014-07-03 8

Problem Condition: Future 2035 Cumulative With Project Conditions
Mitigated Geometric Lane Configuration
(Add 1 WB Thru plus RT Lane; Add 1 N/B shared Thru plus RT lane)

Movement	Available Lanes		Peak Hour Volumes								Movement V/C Per Lane		Critical V/C	
			Existing		Other Proj.		Project		Study Vol.					
	No.	Cap.	AM	PM	AM	PM	AM	PM	AM	PM	AM	PM	AM	PM
N/B Left	1.5	2400	279	433	17	26	0	0	318	494	0.133	0.206	0.133	0.206
N/B Thru	2.5	4000	969	1484	127	174	67	245	1242	2023	0.310	0.506		
N/B Right	0.0	0	0	0	0	0	0	0	0	0	0.000	0.000		
S/B Left	0.0	0	0	0	0	0	0	0	0	0	0.000	0.000		
S/B Thru	3.0	4800	1164	950	142	167	104	119	1503	1314	0.313	0.274		
S/B Right	1.0	1600	382	314	56	39	124	141	593	519	0.371	0.325	0.371	0.325
E/B Left	0.0	0	0	0	0	0	0	0	0	0	0.000	0.000	0.000	0.000
E/B Thru	0.0	0	0	0	0	0	0	0	0	0	0.000	0.000		
E/B Right	0.0	0	0	0	0	0	0	0	0	0	0.000	0.000		
W/B Left	2.0	2880	474	306	29	18	0	0	541	349	0.188	0.121		
W/B Thru	2.0	3200	216	157	13	10	0	0	246	179	0.226	0.212	0.226	0.212
W/B Right	0.0	0	374	280	35	61	39	135	478	499	0.000	0.000		
	ANALYSIS RESULTS :								Sum Of Critical V/C:				0.730	0.743
									Lost Time:				0.100	0.100
									Total V/C:				0.830	0.843
									Level Of Service:				D	D

ASSUMPTIONS AND METHODOLOGY

Existing Conditions Year: 2020
Study Volume Year: 2035
Annual Growth Factor: 0.52 Percent

Lane Capacity
Single Through Lane = 1600 Vehicles Per Hour
Single Turn Lane = 1600 Vehicles Per Hour
Dual Turn Lane = 2880 Vehicles Per Hour

Level Of Service Definition

Total V/C	LOS
Under 0.605	A
0.605 - 0.704	B
0.705 - 0.804	C
0.805 - 0.904	D
0.905 - 1.004	E
Over 1.005	F

Lost time for signal Yellow and All red intervals: 0.10 of V/C Ratio

NOTES:

EVAN BROOKS ASSOCIATES, PASADENA, CALIFORNIA

INTERSECTION CAPACITY UTILIZATION ANALYSIS

Location: Santa Anita Avenue and Asher Street/!-10 EB Ramps **City:** El Monte
Project No.: EBA2014-07 **Analyzed By:** MYR **File Name:** 2014-07-04 7

Problem Condition: Future 2020 Cumulative With Project Conditions
Mitigated Geometric Lane Configuration
(Add 1 E/B Left-turn and 1 E/B Eight-turn Lane, Add 1 S/B Left-turn lane)

Movement	Available Lanes		Peak Hour Volumes								Movement V/C Per Lane		Critical V/C	
			Existing		Other Proj.		Project		Study Vol.					
	No.	Cap.	AM	PM	AM	PM	AM	PM	AM	PM	AM	PM	AM	PM
N/B Left	0.0	0	0	0	0	0	0	0	0	0	0.000	0.000		
N/B Thru	3.5	5600	778	1252	109	127	16	55	929	1476	0.166	0.264		0.264
N/B Right	0.5	800	305	180	19	12	0	0	334	197	0.418	0.247	0.418	
S/B Left	2.0	2880	323	272	57	46	79	92	470	419	0.163	0.145	0.163	0.145
S/B Thru	2.0	3200	1242	1025	112	145	31	35	1426	1239	0.446	0.387		
S/B Right	0.0	0	0	0	0	0	0	0	0	0	0.000	0.000		
E/B Left	2.5	3600	390	617	32	74	63	214	497	926	0.138	0.257		0.257
E/B Thru	0.5	0	97	148	6	10	0	0	106	162	0.000	0.000		
E/B Right	2.0	2880	385	449	24	28	0	0	422	492	0.147	0.171	0.147	
W/B Left	0.0	0	0	0	0	0	0	0	0	0	0.000	0.000	0.000	
W/B Thru	0.0	0	0	0	0	0	0	0	0	0	0.000	0.000		0.000
W/B Right	0.0	0	0	0	0	0	0	0	0	0	0.000	0.000		0.000
	ANALYSIS RESULTS :								Sum Of Critical V/C:				0.728	0.666
									Lost Time:				0.100	0.100
									Total V/C:				0.828	0.766
									Level Of Service:				D	C

ASSUMPTIONS AND METHODOLOGY

Existing Conditions Year: 2016
Study Volume Year: 2020
Annual Growth Factor: 0.82 Percent

Lane Capacity
Single Through Lane = 1600 Vehicles Per Hour
Single Turn Lane = 1600 Vehicles Per Hour
Dual Turn Lane = 2880 Vehicles Per Hour

Level Of Service Definition

Total V/C	LOS
Under 0.605	A
0.605 - 0.704	B
0.705 - 0.804	C
0.805 - 0.904	D
0.905 - 1.004	E
Over 1.005	F

Lost time for signal Yellow and All red intervals: 0.10 of V/C Ratio

NOTES:

EVAN BROOKS ASSOCIATES, PASADENA, CALIFORNIA

INTERSECTION CAPACITY UTILIZATION ANALYSIS

Location: Santa Anita Avenue and Asher Street/!-10 EB Ramps **City:** El Monte
Project No.: EBA2014-07 **Analyzed By:** MYR **File Name:** 2014-07-04 8

Problem Condition: Future 2035 Cumulative With Project Conditions
Mitigated Geometric Lane Configuration
(Add 1 E/B Left-turn and 1 E/B Eight-turn Lane, Add 1 S/B Left-turn lane)

Movement	Available Lanes		Peak Hour Volumes								Movement V/C Per Lane		Critical V/C	
			Existing		Other Proj.		Project		Study Vol.					
	No.	Cap.	AM	PM	AM	PM	AM	PM	AM	PM	AM	PM	AM	PM
N/B Left	0.0	0	0	0	0	0	0	0	0	0	0.000	0.000		
N/B Thru	3.5	5600	804	1294	109	127	16	55	994	1581	0.177	0.282		0.282
N/B Right	0.5	800	315	186	19	12	0	0	360	212	0.450	0.265	0.450	
S/B Left	2.0	2880	334	281	57	46	79	92	497	442	0.173	0.153	0.173	0.153
S/B Thru	2.0	3200	1283	1059	112	145	31	35	1530	1324	0.478	0.414		
S/B Right	0.0	0	0	0	0	0	0	0	0	0	0.000	0.000		
E/B Left	2.5	3600	402	637	32	74	63	214	530	977	0.147	0.271		0.271
E/B Thru	0.5	0	100	153	6	10	0	0	114	175	0.000	0.000		
E/B Right	2.0	2880	398	464	24	28	0	0	454	530	0.158	0.184	0.158	
W/B Left	0.0	0	0	0	0	0	0	0	0	0	0.000	0.000	0.000	
W/B Thru	0.0	0	0	0	0	0	0	0	0	0	0.000	0.000		0.000
W/B Right	0.0	0	0	0	0	0	0	0	0	0	0.000	0.000		0.000
	ANALYSIS RESULTS :								Sum Of Critical V/C:				0.780	0.707
									Lost Time:				0.100	0.100
									Total V/C:				0.880	0.807
									Level Of Service:				D	D

ASSUMPTIONS AND METHODOLOGY

Existing Conditions Year: 2020
Study Volume Year: 2035
Annual Growth Factor: 0.52 Percent

Lane Capacity
Single Through Lane = 1600 Vehicles Per Hour
Single Turn Lane = 1600 Vehicles Per Hour
Dual Turn Lane = 2880 Vehicles Per Hour

Level Of Service Definition

Total V/C	LOS
Under 0.605	A
0.605 - 0.704	B
0.705 - 0.804	C
0.805 - 0.904	D
0.905 - 1.004	E
Over 1.005	F

Lost time for signal Yellow and All red intervals: 0.10 of V/C Ratio

NOTES:

EVAN BROOKS ASSOCIATES, PASADENA, CALIFORNIA

INTERSECTION CAPACITY UTILIZATION ANALYSIS

Location: Valley Boulevard and Ramona Boulevard **City:** El Monte
Project No.: EBA2014-07 **Analyzed By:** MYR **File Name:** 2014-07-07 7

Problem Condition: Future 2020 Cumulative With Project Conditions
Mitigated Geometric Lane Configuration
(Add 1 S/B Left-turn lane)

Movement	Available Lanes		Peak Hour Volumes								Movement V/C Per Lane		Critical V/C	
			Existing		Other Proj.		Project		Study Vol.					
	No.	Cap.	AM	PM	AM	PM	AM	PM	AM	PM	AM	PM	AM	PM
N/B Left	1.0	1600	194	200	12	12	3	11	216	231	0.135	0.144		0.144
N/B Thru	2.0	3200	730	450	72	65	16	20	843	550	0.263	0.172	0.263	
N/B Right	1.0	1600	32	58	2	4	40	50	75	114	0.047	0.071		
S/B Left	2.0	2880	172	517	38	90	0	0	215	624	0.075	0.217	0.075	
S/B Thru	2.0	3200	472	750	48	90	14	52	549	917	0.172	0.287		0.287
S/B Right	1.0	1600	10	14	0	0	4	13	15	29	0.009	0.018		
E/B Left	1.0	1600	11	21	0	2	10	11	22	34	0.014	0.021	0.014	
E/B Thru	2.0	3200	160	476	11	31	100	108	276	631	0.112	0.225		0.225
E/B Right	0.0	0	69	66	7	14	4	5	83	87	0.000	0.000		
W/B Left	1.0	1600	56	33	5	3	31	115	93	152	0.058	0.095		0.095
W/B Thru	2.0	3200	481	240	31	16	58	193	586	457	0.328	0.225	0.328	
W/B Right	0.0	0	393	204	59	53	0	0	465	264	0.000	0.000		
	ANALYSIS RESULTS :								Sum Of Critical V/C:				0.681	0.750
									Lost Time:				0.100	0.100
									Total V/C:				0.781	0.850
									Level Of Service:				C	D

ASSUMPTIONS AND METHODOLOGY

Existing Conditions Year: 2016
Study Volume Year: 2020
Annual Growth Factor: 0.82 Percent

Lane Capacity
Single Through Lane = 1600 Vehicles Per Hour
Single Turn Lane = 1600 Vehicles Per Hour
Dual Turn Lane = 2880 Vehicles Per Hour

Level Of Service Definition

Total V/C	LOS
Under 0.605	A
0.605 - 0.704	B
0.705 - 0.804	C
0.805 - 0.904	D
0.905 - 1.004	E
Over 1.005	F

Lost time for signal Yellow and All red intervals: 0.10 of V/C Ratio

NOTES:

EVAN BROOKS ASSOCIATES, PASADENA, CALIFORNIA

INTERSECTION CAPACITY UTILIZATION ANALYSIS

Location: Valley Boulevard and Ramona Boulevard **City:** El Monte
Project No.: EBA2014-07 **Analyzed By:** MYR **File Name:** 2014-07-07 8

Problem Condition: Future 2035 Cumulative With Project Conditions
Mitigated Geometric Lane Configuration
(Add 1 S/B Left-turn lane)

Movement	Available Lanes		Peak Hour Volumes								Movement V/C Per Lane		Critical V/C	
			Existing		Other Proj.		Project		Study Vol.					
	No.	Cap.	AM	PM	AM	PM	AM	PM	AM	PM	AM	PM	AM	PM
N/B Left	1.0	1600	201	207	12	12	3	11	232	247	0.145	0.155		0.155
N/B Thru	2.0	3200	755	465	72	65	16	20	904	588	0.283	0.184	0.283	
N/B Right	1.0	1600	33	60	2	4	40	50	78	119	0.049	0.074		
S/B Left	2.0	2880	177	534	38	90	0	0	230	667	0.080	0.232	0.080	
S/B Thru	2.0	3200	488	775	48	90	14	52	589	980	0.184	0.306		0.306
S/B Right	1.0	1600	11	15	0	0	4	13	16	30	0.010	0.019		
E/B Left	1.0	1600	12	21	0	2	10	11	23	36	0.014	0.023	0.014	
E/B Thru	2.0	3200	165	492	11	31	100	108	290	671	0.118	0.239		0.239
E/B Right	0.0	0	72	68	7	14	4	5	88	93	0.000	0.000		
W/B Left	1.0	1600	58	34	5	3	31	115	98	155	0.061	0.097		0.097
W/B Thru	2.0	3200	497	248	31	16	58	193	627	477	0.351	0.237	0.351	
W/B Right	0.0	0	406	210	59	53	0	0	498	281	0.000	0.000		
	ANALYSIS RESULTS :								Sum Of Critical V/C:				0.728	0.796
									Lost Time:				0.100	0.100
									Total V/C:				0.828	0.896
									Level Of Service:				D	D

ASSUMPTIONS AND METHODOLOGY

Existing Conditions Year: 2020
Study Volume Year: 2035
Annual Growth Factor: 0.52 Percent

Lane Capacity
Single Through Lane = 1600 Vehicles Per Hour
Single Turn Lane = 1600 Vehicles Per Hour
Dual Turn Lane = 2880 Vehicles Per Hour

Level Of Service Definition

Total V/C	LOS
Under 0.605	A
0.605 - 0.704	B
0.705 - 0.804	C
0.805 - 0.904	D
0.905 - 1.004	E
Over 1.005	F

Lost time for signal Yellow and All red intervals: 0.10 of V/C Ratio

NOTES:

EVAN BROOKS ASSOCIATES, PASADENA, CALIFORNIA

INTERSECTION CAPACITY UTILIZATION ANALYSIS

Location: Peck Road and Valley Boulevard **City:** El Monte
Project No.: EBA2014-07 **Analyzed By:** MYR **File Name:** 2014-07-08 7

Problem Condition: Future 2020 Cumulative With Project Conditions
Mitigated Geometric Lane Configuration
(Add 1 E/B Thru Lane, Add 1 W/B Left-turn lane and 1 W/B Thru Lane)

Movement	Available Lanes		Peak Hour Volumes								Movement V/C Per Lane		Critical V/C	
			Existing		Other Proj.		Project		Study Vol.					
	No.	Cap.	AM	PM	AM	PM	AM	PM	AM	PM	AM	PM	AM	PM
N/B Left	1.0	1600	207	37	19	13	24	77	257	129	0.161	0.081	0.161	0.081
N/B Thru	3.0	4800	675	577	43	37	0	0	740	632	0.226	0.192		
N/B Right	0.0	0	313	265	20	16	0	0	343	289	0.000	0.000		
S/B Left	1.0	1600	194	191	17	17	0	0	218	214	0.136	0.134		
S/B Thru	2.0	3200	876	826	56	52	0	0	961	905	0.300	0.283	0.300	0.283
S/B Right	1.0	1600	199	148	12	10	14	50	232	213	0.083	0.035		
E/B Left	1.0	1600	71	120	4	8	21	25	99	157	0.062	0.098	0.062	
E/B Thru	3.0	4800	465	1259	52	106	86	101	619	1508	0.129	0.314		0.314
E/B Right	1.0	1600	74	339	9	33	51	55	137	439	0.086	0.194		
W/B Left	2.0	2880	55	201	4	12	0	0	60	220	0.021	0.077		0.077
W/B Thru	3.0	4800	894	846	71	88	57	202	1052	1165	0.219	0.243	0.219	
W/B Right	1.0	1600	192	160	16	16	0	0	214	181	0.134	0.113		
	ANALYSIS RESULTS :								Sum Of Critical V/C:				0.742	0.754
									Lost Time:				0.100	0.100
									Total V/C:				0.842	0.854
									Level Of Service:				D	D

ASSUMPTIONS AND METHODOLOGY

Existing Conditions Year: 2016
Study Volume Year: 2020
Annual Growth Factor: 0.82 Percent

Lane Capacity
Single Through Lane = 1600 Vehicles Per Hour
Single Turn Lane = 1600 Vehicles Per Hour
Dual Turn Lane = 2880 Vehicles Per Hour

Level Of Service Definition

Total V/C	LOS
Under 0.605	A
0.605 - 0.704	B
0.705 - 0.804	C
0.805 - 0.904	D
0.905 - 1.004	E
Over 1.005	F

Lost time for signal Yellow and All red intervals: 0.10 of V/C Ratio

NOTES:

EVAN BROOKS ASSOCIATES, PASADENA, CALIFORNIA

INTERSECTION CAPACITY UTILIZATION ANALYSIS

Location: Peck Road and Valley Boulevard **City:** El Monte
Project No.: EBA2014-07 **Analyzed By:** MYR **File Name:** 2014-07-08 8

Problem Condition: Future 2035 Cumulative With Project Conditions
Mitigated Geometric Lane Configuration
(Add 1 E/B Thru Lane, Add 1 W/B Left-turn lane and 1 W/B Thru Lane)

Movement	Available Lanes		Peak Hour Volumes								Movement V/C Per Lane		Critical V/C	
			Existing		Other Proj.		Project		Study Vol.					
	No.	Cap.	AM	PM	AM	PM	AM	PM	AM	PM	AM	PM	AM	PM
N/B Left	1.0	1600	214	38	19	13	24	77	274	132	0.171	0.083		
N/B Thru	3.0	4800	697	596	43	37	0	0	796	681	0.243	0.207	0.243	0.207
N/B Right	0.0	0	323	273	20	16	0	0	369	312	0.000	0.000		
S/B Left	1.0	1600	201	197	17	17	0	0	234	230	0.146	0.144	0.146	0.144
S/B Thru	3.0	4800	905	853	56	52	0	0	1034	974	0.216	0.203		
S/B Right	1.0	1600	206	153	12	10	14	50	249	225	0.090	0.036		
E/B Left	1.0	1600	74	124	4	8	21	25	105	167	0.066	0.104	0.066	
E/B Thru	3.0	4800	480	1301	52	106	86	101	658	1613	0.137	0.336		0.336
E/B Right	1.0	1600	77	350	9	33	51	55	143	467	0.090	0.210		
W/B Left	2.0	2880	57	208	4	12	0	0	65	237	0.023	0.082		0.082
W/B Thru	3.0	4800	923	874	71	88	57	202	1127	1235	0.235	0.257	0.235	
W/B Right	1.0	1600	199	165	16	16	0	0	231	195	0.144	0.122		
	ANALYSIS RESULTS :								Sum Of Critical V/C:				0.689	0.769
									Lost Time:				0.100	0.100
									Total V/C:				0.789	0.869
									Level Of Service:				C	D

ASSUMPTIONS AND METHODOLOGY

Existing Conditions Year: 2020
Study Volume Year: 2035
Annual Growth Factor: 0.52 Percent

Lane Capacity
Single Through Lane = 1600 Vehicles Per Hour
Single Turn Lane = 1600 Vehicles Per Hour
Dual Turn Lane = 2880 Vehicles Per Hour

Level Of Service Definition

Total V/C	LOS
Under 0.605	A
0.605 - 0.704	B
0.705 - 0.804	C
0.805 - 0.904	D
0.905 - 1.004	E
Over 1.005	F

Lost time for signal Yellow and All red intervals: 0.10 of V/C Ratio

NOTES:

EVAN BROOKS ASSOCIATES, PASADENA, CALIFORNIA

CALTRANS INTERSECTION LEVEL OF SERVICE ANALYSIS USING SYNCHRO

DATA FROM

CALTRANS 2014 TRAFFIC VOLUMES BOOKS

Dist	Route	County	Postmile	Description	Back Peak Hour	Back Peak Month	Back AADT	Ahead Peak Hour	Ahead Peak Month	Ahead AADT
7	10	LA	25.327	SOUTH SAN GABRIEL, DEL MAR AVENUE	14100	231000	226000	14000	228000	223000
7	10	LA	25.837	ROSEMEAD, SAN GABRIEL BOULEVARD	14000	228000	223000	13700	225000	220000
7	10	LA	26.34	ROSEMEAD, WALNUT GROVE AVENUE	13700	225000	220000	13500	222000	218000
7	10	LA	26.857	EL MONTE, JCT. RTE. 164	13500	222000	218000	14500	214000	204000
7	10	LA	27.963	EL MONTE, TEMPLE CITY BLVD/BALDWIN AVE	14500	214000	204000	15600	232000	221000
7	10	LA	28.673	EL MONTE, SANTA ANITA AVENUE	15600	232000	221000	15400	228000	218000
7	10	LA	29.545	EL MONTE, VALLEY BLVD/PECK RD	15400	228000	218000	14500	220000	211000
7	10	LA	30.581	EL MONTE, GARVEY AVENUE	14500	220000	211000	15600	237000	226000
7	10	LA	31.151	BALDWIN PARK, JCT. RTE. 605	15600	237000	226000	15600	251000	241000
7	10	LA	31.54	BALDWIN PARK, BESS AVE/ FRAZIER ST	15600	251000	241000	14400	232000	222000
7	10	LA	32.218	BALDWIN PARK, BALDWIN PARK BOULEVARD	14400	232000	222000	14300	229000	219000
7	10	LA	32.657	BALDWIN PARK, FRANCISQUITO AVENUE	14300	229000	219000	13200	213000	203000
7	10	LA	33.351	BALDWIN PARK, PUENTE AVENUE	13200	213000	203000	13800	221000	211000
7	10	LA	34.457	WEST COVINA, ORANGE/ PACIFIC AVENUES	13800	221000	211000	14200	226000	216000
7	10	LA	35.402	WEST COVINA, CALIFORNIA/VINCENT AVENUES	14200	226000	216000	14500	229000	219000
7	10	LA	36.5	WEST COVINA, AZUSA AVENUE	14500	229000	219000	15200	239000	229000
7	10	LA	37.48	WEST COVINA, CITRUS STREET	15200	239000	229000	15000	233000	224000
7	10	LA	38.008	WEST COVINA, BARRANCA STREET	15000	233000	224000	15400	233000	222000
7	10	LA	38.509	WEST COVINA, GRAND AVENUE	15400	233000	222000	14500	217000	207000
7	10	LA	38.969	WEST COVINA, HOLT AVENUE	14500	217000	207000	14600	217000	207000
7	10	LA	40.457	VIA VERDE	14600	217000	207000	14500	214000	205000
7	10	LA	42.443	POMONA, JCT. RTES. 57/71	14500	214000	205000	18500	248000	241000
7	10	LA	43.658	POMONA, FAIRPLEX DRIVE	18500	248000	241000	18100	247000	241000
7	10	LA	44.185	POMONA, DUDLEY STREET	18100	247000	241000	17900	248000	240000
7	10	LA	45.277	POMONA, WHITE AVENUE	17900	248000	240000	16900	238000	231000
7	10	LA	45.726	POMONA, GAREY AVENUE	16900	238000	231000	17500	252000	243000
7	10	LA	46.405	POMONA, TOWNE AVENUE	17500	252000	243000	16900	253000	244000
7	10	LA	47.737	POMONA, INDIAN HILL BOULEVARD	16900	253000	244000	17800	254000	245000
7	10	LA	48.265	LOS ANGELES/SAN BERNARDINO COUNTY LINE	17800	254000	245000			
8	10	SBD	0	LOS ANGELES/SAN BERNARDINO COUNTY LINE				17800	254000	245000
8	10	SBD	0.681	MONTCLAIR, MONTE VISTA AVENUE	17700	259000	248000	17600	257000	246000

OTM32420
05/26/2015
11:49:56

CALTRANS TRAFFIC VOLUMES
LATEST TRAFFIC YEAR SELECTED
PEAK HOUR VOLUME DATA

								AM PEAK								PM PEAK						
DI	RTE	CO	PRE	PM	CS	LEG	YR	Dir	1 WAY PHV	% K	% D	% KD	HR	DAY	MNTH	Dir	1 WAY PHV	% K	% D	% KD	HR	DAY	MNTH
03	005	YOL		5.53	65	B	14	N	2098	7.43	53.89	4.01	7	WED	SEP	S	2846	8.76	62.03	5.43	17	THU	JUL
03	005	COL	R	6.793	82	B	14	S	1671	9.77	55.04	5.38	12	SAT	NOV	S	2184	12.12	57.99	7.03	13	SUN	DEC
03	005	GLE	R	9.872	345	B	14	S	1205	9.61	51.63	4.96	11	SUN	AUG	S	1453	9.97	59.99	5.98	15	SUN	MAY
02	005	TEH	R	26.53	321	B	14	S	1624	8.8	54.1	4.76	11	MON	JUL	N	1935	9.89	57.4	5.67	16	FRI	AUG
02	005	SHA	R	3.83	272	B	14	N	2211	7.14	63.23	4.52	7	WED	AUG	S	2370	8.53	56.75	4.84	17	THU	AUG
02	005	SHA	R	15.45	196	A	14	S	2417	7.92	56.63	4.48	7	TUE	OCT	N	2522	8.62	54.24	4.68	17	THU	JUL
11	007	IMP		6.718	402	B	14	N	259	7.19	56.92	4.09	7	TUE	MAY	S	385	9.59	63.43	6.08	17	FRI	MAR
11	008	SD	L	1.213	951	B	14	E	2225	8.4	57.35	4.82	7	THU	OCT	E	2031	8.04	54.7	4.4	15	TUE	NOV
11	008	SD	R	20.04	888	B	14	W	3601	6.67	68.59	4.57	7	THU	SEP	E	3777	8.59	55.85	4.8	15	FRI	MAY
05	009	SCR		.046	48	A	14	N	1591	10.53	58.19	6.13	12	MON	DEC	N	1651	10.7	59.41	6.36	15	THU	DEC
05	009	SCR		.63	681	A	14	S	306	9.59	61.57	5.91	12	SAT	JUN	S	361	11.58	60.17	6.97	14	SAT	MAR
05	009	SCR		13.04	169	B	14	S	641	8.84	59.19	5.23	12	SAT	MAR	N	623	9.39	54.17	5.09	17	FRI	MAR
05	009	SCR		27.09	49	B	14	N	277	10.9	97.88	10.67	7	WED	MAR	S	340	15.64	83.74	13.1	16	FRI	JUN
04	009	SCL		0	50	A	13	S	265	13.37	63.55	8.49	12	SAT	AUG	S	305	17.02	57.44	9.78	13	SUN	MAY
04	009	SCL		11.45	171	B	13	S	2161	8.9	70.07	6.23	8	TUE	NOV	N	1726	8.15	61.14	4.98	17	THU	FEB
07	010	LA		30.3	429	A	14	W	8614	6.8	60.04	4.08	7	THU	JUL	E	7429	6.1	57.73	3.52	14	THU	FEB
04	012	SON	R	15.3	67	A	14	E	3138	6.98	57.75	4.03	7	WED	SEP	W	3267	7.81	53.74	4.2	17	MON	JUN
04	012	SON		20.1	71	A	14	W	1448	9	55.74	5.02	8	MON	DEC	W	1414	9.02	54.3	4.9	15	FRI	DEC
04	012	SON		37.51	73	B	14	E	821	8.12	71.95	5.84	7	TUE	DEC	E	809	9.77	58.97	5.76	14	TUE	MAR
04	012	SON		41.36	5	B	14	W	380	10.23	66.67	6.82	12	SAT	APR	W	398	11.25	63.48	7.14	16	SAT	JUL
04	012	NAP		.24	74	A	14	W	1874	7.15	71.77	5.13	6	WED	JUL	E	2102	8.41	68.42	5.75	16	TUE	JAN
04	012	SOL		19.17	315	B	14	W	662	8.07	71.57	5.77	7	MON	JUL	E	768	10.18	65.81	6.7	16	FRI	JUL
04	012	SOL		26.28	317	B	14	W	955	7.01	66.88	4.69	6	MON	APR	E	1066	8.78	59.55	5.23	16	FRI	OCT
10	012	SJ	L	23.29	123	B	13	E	693	9.13	60.21	5.5	12	SAT	JUN	E	775	8.93	68.83	6.15	17	FRI	MAR
10	012	CAL		9.927	91	B	13	E	305	8.03	66.45	5.34	7	WED	APR	E	299	8.66	60.4	5.23	17	FRI	JAN
10	012	CAL		9.927	157	A	13	E	481	7.76	69.91	5.42	7	WED	APR	W	499	9.11	61.76	5.63	17	THU	JAN
04	013	ALA		4.262	27	A	12	N	2800	10.39	54.03	5.62	8	FRI	DEC	N	2572	7.68	67.19	5.16	17	THU	SEP
04	013	ALA		13.18	125	B	12	S	1890	12.75	64	8.16	8	THU	MAR	N	1538	11.06	60.06	6.64	16	TUE	MAR
04	013	ALA		13.91	240	B	12	S	1981	9.52	66.66	6.34	8	MON	DEC	N	1490	8.88	53.77	4.77	17	TUE	DEC
07	014	LA	R	59.80	338	A	14	S	3196	6.98	52.39	3.66	7	WED	FEB	S	4034	8.32	55.49	4.61	16	FRI	FEB
06	014	KER	R	0	927	A	14	N	1401	6.88	68.51	4.71	6	TUE	FEB	S	1710	9.44	60.94	5.75	17	THU	JUL
06	014	KER		57.77	301	B	14	S	361	10.92	64.7	7.07	10	MON	SEP	N	529	16.82	61.58	10.36	13	THU	DEC
06	014	KER		57.77	302	A	14	S	378	12.05	68.11	8.2	11	SUN	DEC	S	546	14.24	83.23	11.85	17	MON	MAY

2014 Daily Truck Traffic

RTE	DIST	CNTY	POST MILE	LEG	DESCRIPTION	VEHICLE AADT TOTAL	TRUCK AADT TOTAL	TRUCK % TOT VEH	TRUCK By Axle 2	TRUCK By Axle 3	TRUCK By Axle 4	TRUCK By Axle 5+	TOTAL % TRUCK By Axle 2	TOTAL % TRUCK By Axle 3	TOTAL % TRUCK By Axle 4	TOTAL % TRUCK By Axle 5+	EAL 2-WAY (1000)	YEAR VER/ EST
010	07	LA	14.836	A	LOS ANGELES, JCT. RTE. 110	251,000	9,163	3.65	4,967	1,368	407	2,421	54.21	14.93	4.44	26.42	1,195	13E
010	07	LA	16.025	A	SAN PEDRO ST	254,000	9,271	3.65	5,026	1,384	412	2,449	54.21	14.93	4.44	26.42	1,209	13E
010	07	LA	50	A	LOS ANGELES, JCT. RTE. 101	90,000	2,204	2.45	1,234	231	53	686	55.98	10.48	2.42	31.12	309	10E
010	07	LA	50.655	B	LOS ANGELES, JCT. RTE. 5	90,000	2,204	2.45	1,234	231	53	686	55.98	10.48	2.42	31.12	309	10E
010	07	LA	18.394	A	LOS ANGELES, JCT. RTE. 5	210,000	7,329	3.49	3,090	934	355	2,950	42.16	12.74	4.85	40.25	1,264	10E
010	07	LA	19.668	O	EAST LOS ANGELES CITY LIMITS	232,000	7,169	3.09	2,447	1,059	308	3,355	34.14	14.77	4.29	46.80	1,386	13V
010	07	LA	21.382	B	MONTEREY PARK, JCT. RTE. 710	221,000	7,602	3.44	3,205	968	369	3,060	42.16	12.74	4.85	40.25	1,311	10E
010	07	LA	21.382	A	MONTEREY PARK, JCT. RTE. 710	210,000	6,468	3.08	3,062	730	243	2,433	47.34	11.29	3.76	37.61	1,049	13E
010	07	LA	24.32	O	ALMANSOR AVE	220,000	6,776	3.08	3,208	765	255	2,548	47.34	11.29	3.76	37.61	1,099	13E
010	07	LA	24.831	A	MONTEREY PARK, NEW AVE	226,000	6,961	3.08	3,295	786	262	2,618	47.34	11.29	3.76	37.61	1,129	13E
010	07	LA	26.857	B	EL MONTE, JCT. RTE. 164	218,000	6,713	3.08	3,178	758	252	2,525	47.34	11.29	3.76	37.61	1,089	13E
010	07	LA	26.857	A	EL MONTE, JCT. RTE. 164	204,000	6,282	3.08	2,974	709	236	2,363	47.34	11.29	3.76	37.61	1,019	13E
010	07	LA	31.151	B	BALDWIN PARK, JCT. RTE. 605	226,000	7,616	3.37	3,408	1,284	411	2,513	44.75	16.86	5.40	32.99	1,165	13V
010	07	LA	31.151	A	BALDWIN PARK, JCT. RTE. 605	241,000	15,545	6.45	5,660	1,217	735	7,933	36.41	7.83	4.73	51.03	3,155	10E
010	07	LA	36.5	B	WEST COVINA, AZUSA AVE	219,000	15,637	7.14	5,693	1,224	740	7,980	36.41	7.83	4.73	51.03	3,174	10E
010	07	LA	42.443	B	POMONA, JCT. RTES. 57/71	205,000	16,072	7.84	5,852	1,258	760	8,202	36.41	7.83	4.73	51.03	3,262	10E

07-LA-010

P POST P MILE	P S DESCRIPTION	2005 ADT	2006 ADT	2007 ADT	2008 ADT	2009 ADT	2010 ADT	2011 ADT	2012 ADT	2013 ADT	2014 ADT
026.852	SEG EB OFF TO NB ROSEMEAD			8600	8900	8800			7700		8563
026.914	SEG WB OFF TO SB ROSEMEAD			4850	4550	4500			4850		5785
026.915	SEG WB OFF TO NB ROSEMEAD			6000	5800	5800			5100		5175
026.997	WB OFF TO ROSEMEAD BLVD			10800	10300	10300			10000		5343
026.998	SEG EB ON FROM SB ROSEMEAD			6500	6300	6500					6531
026.999	SEG EB ON FROM NB ROSEMEAD			4000	3700	3750			3450		3230
027.085	SEG EB OFF TO FLAIR DR			3350	3250	3350			3451	3450	3461
027.098	SEG EB ON FROM FLAIR DR			980							981
027.141	EB ON FROM ROSEMEAD BLVD			11500							12071
027.671	WB ON FROM TEMPLE CITY BLVD			12600	12500				12700		13331
027.725	WB OFF TO TEMPLE CITY BLVD			10500		10500			10200		10711
027.978	EB OFF TO BALDWIN AVE			13800	13500	13600			11500		12071
028.116	EB ON FROM BALDWIN AVE			11500	11400	11600			11600		8969
028.520	WB ON FROM SANTA ANITA AVE			12500	12500	12300					12911
028.556	EB OFF TO SANTA ANITA AVE			13600							8770
028.810	EB ON FROM SANTA ANITA AVE			8900					8300		8534
028.842	WB OFF TO SANTA ANITA AVE			9500	8900	9200			10101	10100	10601
029.116	EB OFF TO SB PECK RD			3900							3901
029.349	WB ON FROM SB PECK RD			6200	6200	6000			6500		6596
029.440	WB OFF TO SB PECK RD			2150	1950	2150			1800		1885
029.449	EB OFF TO NB PECK RD			7500	7700	7900			8400		8191
029.529	EB ON FROM EB VALLEY BLVD			4300	4000	4100					3991

07-LA-010

P POST P MILE	P S DESCRIPTION	2005 ADT	2006 ADT	2007 ADT	2008 ADT	2009 ADT	2010 ADT	2011 ADT	2012 ADT	2013 ADT	2014 ADT
029.611	WB ON FROM WB VALLEY BLVD			4050	3950	4000			4600		4888
029.696	WB OFF TO WB VALLEY BLVD			1850	1750	1900			1750		1954
029.979	WB OFF TO EXLINE/ STEWART			5400	5000	4950			4500		4780
030.017	EB ON FROM EXLINE/STEWART			3600	3300	3300			3300		3446
030.696	EB ON FROM GARVEY AVE			9900	9200	9300			8900		3211
030.766	WB OFF TO GARVEY AVE			10800							5423
031.020	EB OFF TO SB RTE 605	18200		16700	16000	15600					15211
031.053	WB ON FROM SB RTE 605	23100		24000							23401
031.174	EB OFF TO NB RTE 605			21900							21351
031.177	SEG WB OFF TO NB RTE 605			8200		7900					7701
031.178	SEG WB OFF TO SB RTE 605	36000		37500		37000					36071
031.210	WB ON FROM NB RTE 605	16600		17300							16861
031.288	EB ON FROM RTE 605			45500	44500	44000					38901
031.304	WB OFF TO RTE 605			45500	45500	45000					43871
031.579	EB OFF TO BESS AVE/FRAZIER			11200							10321
031.632	WB ON FROM BESS AVE/FRAZIER			7200	6900	6800					9101
031.759	WB OFF TO BESS AVE/FRAZIER			1400	1700	1350					1311
032.164	WB ON FROM SB BALDWIN PARK			6000	5600	5900					5343
032.254	EB OFF TO BALDWIN PARK BLVD			5700		5400			4950		5354
032.313	WB ON FROM NB BALDWIN PARK			6500	6200	6000					4049
032.349	EB ON FROM BALDWIN PARK BL			6400	6100	6100			5900		5854
032.396	WB OFF TO BALDWIN PARK BLVD			4150	4400	4400					4658

INTERSECTION LEVEL OF SERVICE ANALYSIS

(CALTRANS FACILITIES)

Movement	EBL	EBT	EBR	WBL	WBT	WBR	NBL	NBT	NBR	SBL	SBT	SBR
Lane Configurations												
Ideal Flow (vphpl)	1900	1900	1900	1900	1900	1900	1900	1900	1900	1900	1900	1900
Total Lost time (s)				4.0	4.0		4.0	4.0			4.0	4.0
Lane Util. Factor				0.97	1.00		1.00	0.95			0.91	1.00
Frt				1.00	0.90		1.00	1.00			1.00	0.85
Flt Protected				0.95	1.00		0.95	1.00			1.00	1.00
Satd. Flow (prot)				3433	1686		1770	3539			5085	1583
Flt Permitted				0.95	1.00		0.24	1.00			1.00	1.00
Satd. Flow (perm)				3433	1686		454	3539			5085	1583
Volume (vph)	0	0	0	459	209	362	270	938	0	0	1126	370
Peak-hour factor, PHF	0.92	0.92	0.92	0.92	0.92	0.92	0.92	0.92	0.92	0.92	0.92	0.92
Adj. Flow (vph)	0	0	0	499	227	393	293	1020	0	0	1224	402
RTOR Reduction (vph)	0	0	0	0	21	0	0	0	0	0	0	237
Lane Group Flow (vph)	0	0	0	499	599	0	293	1020	0	0	1224	165
Turn Type				Perm			Perm					Perm
Protected Phases					8			2			6	
Permitted Phases				8			2					6
Actuated Green, G (s)				15.6	15.6		16.4	16.4			16.4	16.4
Effective Green, g (s)				15.6	15.6		16.4	16.4			16.4	16.4
Actuated g/C Ratio				0.39	0.39		0.41	0.41			0.41	0.41
Clearance Time (s)				4.0	4.0		4.0	4.0			4.0	4.0
Vehicle Extension (s)				3.0	3.0		3.0	3.0			3.0	3.0
Lane Grp Cap (vph)				1339	658		186	1451			2085	649
v/s Ratio Prot					c0.37			0.29			0.24	
v/s Ratio Perm				0.15			c0.64					0.25
v/c Ratio				0.37	0.91		1.58	0.70			0.59	0.25
Uniform Delay, d1				8.7	11.5		11.8	9.8			9.2	7.8
Progression Factor				1.00	1.00		0.89	0.85			1.00	1.00
Incremental Delay, d2				0.2	16.5		281.3	2.6			1.2	0.9
Delay (s)				8.9	28.0		291.8	11.0			10.4	8.7
Level of Service				A	C		F	B			B	A
Approach Delay (s)		0.0			19.5			73.6			10.0	
Approach LOS		A			B			E			A	

Intersection Summary			
HCM Average Control Delay	33.2	HCM Level of Service	C
HCM Volume to Capacity ratio	1.27		
Actuated Cycle Length (s)	40.0	Sum of lost time (s)	8.0
Intersection Capacity Utilization	81.1%	ICU Level of Service	D
Analysis Period (min)	15		
c Critical Lane Group			

Movement	EBL	EBT	EBR	WBL	WBT	WBR	NBL	NBT	NBR	SBL	SBT	SBR
Lane Configurations												
Ideal Flow (vphpl)	1900	1900	1900	1900	1900	1900	1900	1900	1900	1900	1900	1900
Total Lost time (s)	4.0	4.0	4.0					4.0	4.0	4.0	4.0	
Lane Util. Factor	1.00	1.00	1.00					0.91	1.00	1.00	0.95	
Frt	1.00	1.00	0.85					1.00	0.85	1.00	1.00	
Flt Protected	0.95	1.00	1.00					1.00	1.00	0.95	1.00	
Satd. Flow (prot)	1770	1863	1583					5085	1583	1770	3539	
Flt Permitted	0.95	1.00	1.00					1.00	1.00	0.31	1.00	
Satd. Flow (perm)	1770	1863	1583					5085	1583	580	3539	
Volume (vph)	390	97	385	0	0	0	0	778	305	323	1242	0
Peak-hour factor, PHF	0.92	0.92	0.92	0.92	0.92	0.92	0.92	0.92	0.92	0.92	0.92	0.92
Adj. Flow (vph)	424	105	418	0	0	0	0	846	332	351	1350	0
RTOR Reduction (vph)	0	0	7	0	0	0	0	0	183	0	0	0
Lane Group Flow (vph)	424	105	411	0	0	0	0	846	149	351	1350	0
Turn Type	Perm		Perm						Perm	Perm		
Protected Phases		4						2			6	
Permitted Phases	4		4						2	6		
Actuated Green, G (s)	14.0	14.0	14.0					18.0	18.0	18.0	18.0	
Effective Green, g (s)	14.0	14.0	14.0					18.0	18.0	18.0	18.0	
Actuated g/C Ratio	0.35	0.35	0.35					0.45	0.45	0.45	0.45	
Clearance Time (s)	4.0	4.0	4.0					4.0	4.0	4.0	4.0	
Vehicle Extension (s)	3.0	3.0	3.0					3.0	3.0	3.0	3.0	
Lane Grp Cap (vph)	620	652	554					2288	712	261	1593	
v/s Ratio Prot		0.06						0.17			0.38	
v/s Ratio Perm	0.24		0.26						0.21	c0.60		
v/c Ratio	0.68	0.16	0.74					0.37	0.21	1.34	0.85	
Uniform Delay, d1	11.1	9.0	11.4					7.3	6.7	11.0	9.8	
Progression Factor	1.00	1.00	1.00					1.00	1.00	0.73	0.71	
Incremental Delay, d2	3.1	0.1	5.3					0.5	0.7	175.7	5.1	
Delay (s)	14.2	9.1	16.7					7.7	7.4	183.7	12.0	
Level of Service	B	A	B					A	A	F	B	
Approach Delay (s)		14.8			0.0			7.6			47.4	
Approach LOS		B			A			A			D	

Intersection Summary			
HCM Average Control Delay	27.1	HCM Level of Service	C
HCM Volume to Capacity ratio	1.09		
Actuated Cycle Length (s)	40.0	Sum of lost time (s)	8.0
Intersection Capacity Utilization	81.1%	ICU Level of Service	D
Analysis Period (min)	15		
c Critical Lane Group			

Movement	EBL	EBT	EBR	WBL	WBT	WBR	NBL	NBT	NBR	SBL	SBT	SBR
Lane Configurations												
Sign Control		Stop			Stop			Free			Free	
Grade		0%			0%			0%			0%	
Volume (veh/h)	22	11	40	2	0	38	0	606	6	9	971	0
Peak Hour Factor	0.92	0.92	0.92	0.92	0.92	0.92	0.92	0.92	0.92	0.92	0.92	0.92
Hourly flow rate (vph)	24	12	43	2	0	41	0	659	7	10	1055	0
Pedestrians												
Lane Width (ft)												
Walking Speed (ft/s)												
Percent Blockage												
Right turn flare (veh)												
Median type		None			None							
Median storage veh)												
Upstream signal (ft)												
pX, platoon unblocked												
vC, conflicting volume	1446	1740	528	1259	1737	333	1055			665		
vC1, stage 1 conf vol												
vC2, stage 2 conf vol												
vCu, unblocked vol	1446	1740	528	1259	1737	333	1055			665		
tC, single (s)	7.5	6.5	6.9	7.5	6.5	6.9	4.1			4.1		
tC, 2 stage (s)												
tF (s)	3.5	4.0	3.3	3.5	4.0	3.3	2.2			2.2		
p0 queue free %	72	86	91	98	100	94	100			99		
cM capacity (veh/h)	86	85	495	103	86	663	655			920		

Direction, Lane #	EB 1	EB 2	WB 1	NB 1	NB 2	SB 1	SB 2
Volume Total	24	55	43	439	226	362	704
Volume Left	24	0	2	0	0	10	0
Volume Right	0	43	41	0	7	0	0
cSH	86	243	521	1700	1700	920	1700
Volume to Capacity	0.28	0.23	0.08	0.26	0.13	0.01	0.41
Queue Length (ft)	26	21	7	0	0	1	0
Control Delay (s)	62.2	24.2	12.5	0.0	0.0	0.4	0.0
Lane LOS	F	C	B			A	
Approach Delay (s)	35.6		12.5	0.0		0.1	
Approach LOS	E		B				

Intersection Summary			
Average Delay	1.9		
Intersection Capacity Utilization	47.7%	ICU Level of Service	A
Analysis Period (min)	15		

Movement	EBL	EBT	WBT	WBR	SBL	SBR
Lane Configurations						
Sign Control		Free	Free		Stop	
Grade		0%	0%		0%	
Volume (veh/h)	0	995	864	409	0	220
Peak Hour Factor	0.92	0.92	0.92	0.92	0.92	0.92
Hourly flow rate (vph)	0	1082	939	445	0	239
Pedestrians						
Lane Width (ft)						
Walking Speed (ft/s)						
Percent Blockage						
Right turn flare (veh)						
Median type					None	
Median storage veh)						
Upstream signal (ft)						
pX, platoon unblocked						
vC, conflicting volume	1384				1702	692
vC1, stage 1 conf vol						
vC2, stage 2 conf vol						
vCu, unblocked vol	1384				1702	692
tC, single (s)	4.1				6.8	6.9
tC, 2 stage (s)						
tF (s)	2.2				3.5	3.3
p0 queue free %	100				100	38
cM capacity (veh/h)	491				83	386

Direction, Lane #	EB 1	EB 2	WB 1	WB 2	SB 1
Volume Total	541	541	626	758	239
Volume Left	0	0	0	0	0
Volume Right	0	0	0	445	239
cSH	1700	1700	1700	1700	386
Volume to Capacity	0.32	0.32	0.37	0.45	0.62
Queue Length (ft)	0	0	0	0	100
Control Delay (s)	0.0	0.0	0.0	0.0	28.3
Lane LOS					D
Approach Delay (s)	0.0		0.0		28.3
Approach LOS					D

Intersection Summary			
Average Delay	2.5		
Intersection Capacity Utilization	57.3%	ICU Level of Service	B
Analysis Period (min)	15		

Movement	EBL	EBT	EBR	WBL	WBT	WBR	NBL	NBT	NBR	SBL	SBT	SBR
Lane Configurations												
Ideal Flow (vphpl)	1900	1900	1900	1900	1900	1900	1900	1900	1900	1900	1900	1900
Total Lost time (s)				4.0	4.0		4.0	4.0			4.0	4.0
Lane Util. Factor				0.97	1.00		1.00	0.95			0.91	1.00
Frt				1.00	0.90		1.00	1.00			1.00	0.85
Flt Protected				0.95	1.00		0.95	1.00			1.00	1.00
Satd. Flow (prot)				3433	1684		1770	3539			5085	1583
Flt Permitted				0.95	1.00		0.25	1.00			1.00	1.00
Satd. Flow (perm)				3433	1684		464	3539			5085	1583
Volume (vph)	0	0	0	297	152	271	419	1436	0	0	920	304
Peak-hour factor, PHF	0.92	0.92	0.92	0.92	0.92	0.92	0.92	0.92	0.92	0.92	0.92	0.92
Adj. Flow (vph)	0	0	0	323	165	295	455	1561	0	0	1000	330
RTOR Reduction (vph)	0	0	0	0	3	0	0	0	0	0	0	182
Lane Group Flow (vph)	0	0	0	323	457	0	455	1561	0	0	1000	148
Turn Type				Perm			Perm					Perm
Protected Phases					8			2			6	
Permitted Phases				8			2					6
Actuated Green, G (s)				14.1	14.1		17.9	17.9			17.9	17.9
Effective Green, g (s)				14.1	14.1		17.9	17.9			17.9	17.9
Actuated g/C Ratio				0.35	0.35		0.45	0.45			0.45	0.45
Clearance Time (s)				4.0	4.0		4.0	4.0			4.0	4.0
Vehicle Extension (s)				3.0	3.0		3.0	3.0			3.0	3.0
Lane Grp Cap (vph)				1210	594		208	1584			2276	708
v/s Ratio Prot					c0.27			0.44			0.20	
v/s Ratio Perm				0.09			c0.98					0.21
v/c Ratio				0.27	0.77		2.19	0.99			0.44	0.21
Uniform Delay, d1				9.3	11.5		11.1	10.9			7.6	6.7
Progression Factor				1.00	1.00		0.70	0.68			1.00	1.00
Incremental Delay, d2				0.1	6.0		544.2	14.8			0.6	0.7
Delay (s)				9.4	17.5		551.9	22.3			8.2	7.4
Level of Service				A	B		F	C			A	A
Approach Delay (s)		0.0			14.1			141.8			8.0	
Approach LOS		A			B			F			A	

Intersection Summary			
HCM Average Control Delay	74.5	HCM Level of Service	E
HCM Volume to Capacity ratio	1.57		
Actuated Cycle Length (s)	40.0	Sum of lost time (s)	8.0
Intersection Capacity Utilization	83.4%	ICU Level of Service	E
Analysis Period (min)	15		
c Critical Lane Group			

Movement	EBL	EBT	EBR	WBL	WBT	WBR	NBL	NBT	NBR	SBL	SBT	SBR
Lane Configurations												
Ideal Flow (vphpl)	1900	1900	1900	1900	1900	1900	1900	1900	1900	1900	1900	1900
Total Lost time (s)	4.0	4.0	4.0					4.0	4.0	4.0	4.0	
Lane Util. Factor	1.00	1.00	1.00					0.91	1.00	1.00	0.95	
Frt	1.00	1.00	0.85					1.00	0.85	1.00	1.00	
Flt Protected	0.95	1.00	1.00					1.00	1.00	0.95	1.00	
Satd. Flow (prot)	1770	1863	1583					5085	1583	1770	3539	
Flt Permitted	0.95	1.00	1.00					1.00	1.00	0.25	1.00	
Satd. Flow (perm)	1770	1863	1583					5085	1583	466	3539	
Volume (vph)	617	148	449	0	0	0	0	1252	180	272	1025	0
Peak-hour factor, PHF	0.92	0.92	0.92	0.92	0.92	0.92	0.92	0.92	0.92	0.92	0.92	0.92
Adj. Flow (vph)	671	161	488	0	0	0	0	1361	196	296	1114	0
RTOR Reduction (vph)	0	0	15	0	0	0	0	0	118	0	0	0
Lane Group Flow (vph)	671	161	473	0	0	0	0	1361	78	296	1114	0
Turn Type	Perm		Perm						Perm	Perm		
Protected Phases		4						2			6	
Permitted Phases	4		4						2	6		
Actuated Green, G (s)	16.0	16.0	16.0					16.0	16.0	16.0	16.0	
Effective Green, g (s)	16.0	16.0	16.0					16.0	16.0	16.0	16.0	
Actuated g/C Ratio	0.40	0.40	0.40					0.40	0.40	0.40	0.40	
Clearance Time (s)	4.0	4.0	4.0					4.0	4.0	4.0	4.0	
Vehicle Extension (s)	3.0	3.0	3.0					3.0	3.0	3.0	3.0	
Lane Grp Cap (vph)	708	745	633					2034	633	186	1416	
v/s Ratio Prot		0.09						0.27			0.31	
v/s Ratio Perm	0.38		0.31						0.12	c0.64		
v/c Ratio	0.95	0.22	0.75					0.67	0.12	1.59	0.79	
Uniform Delay, d1	11.6	7.9	10.3					9.8	7.6	12.0	10.5	
Progression Factor	1.00	1.00	1.00					1.00	1.00	0.78	0.75	
Incremental Delay, d2	21.7	0.1	4.8					1.8	0.4	288.9	4.3	
Delay (s)	33.3	8.0	15.1					11.6	8.0	298.2	12.2	
Level of Service	C	A	B					B	A	F	B	
Approach Delay (s)		23.5			0.0			11.1			72.2	
Approach LOS		C			A			B			E	

Intersection Summary			
HCM Average Control Delay	35.0	HCM Level of Service	D
HCM Volume to Capacity ratio	1.27		
Actuated Cycle Length (s)	40.0	Sum of lost time (s)	8.0
Intersection Capacity Utilization	83.4%	ICU Level of Service	E
Analysis Period (min)	15		
c Critical Lane Group			

Movement	EBL	EBT	EBR	WBL	WBT	WBR	NBL	NBT	NBR	SBL	SBT	SBR
Lane Configurations												
Sign Control		Stop			Stop			Free			Free	
Grade		0%			0%			0%			0%	
Volume (veh/h)	71	21	100	0	0	20	0	842	13	25	787	0
Peak Hour Factor	0.92	0.92	0.92	0.92	0.92	0.92	0.92	0.92	0.92	0.92	0.92	0.92
Hourly flow rate (vph)	77	23	109	0	0	22	0	915	14	27	855	0
Pedestrians												
Lane Width (ft)												
Walking Speed (ft/s)												
Percent Blockage												
Right turn flare (veh)												
Median type		None			None							
Median storage veh)												
Upstream signal (ft)												
pX, platoon unblocked												
vC, conflicting volume	1389	1839	428	1524	1832	465	855			929		
vC1, stage 1 conf vol												
vC2, stage 2 conf vol												
vCu, unblocked vol	1389	1839	428	1524	1832	465	855			929		
tC, single (s)	7.5	6.5	6.9	7.5	6.5	6.9	4.1			4.1		
tC, 2 stage (s)												
tF (s)	3.5	4.0	3.3	3.5	4.0	3.3	2.2			2.2		
p0 queue free %	19	68	81	100	100	96	100			96		
cM capacity (veh/h)	95	72	575	48	73	544	780			732		

Direction, Lane #	EB 1	EB 2	WB 1	NB 1	NB 2	SB 1	SB 2
Volume Total	77	132	22	610	319	312	570
Volume Left	77	0	0	0	0	27	0
Volume Right	0	109	22	0	14	0	0
cSH	95	260	544	1700	1700	732	1700
Volume to Capacity	0.81	0.51	0.04	0.36	0.19	0.04	0.34
Queue Length (ft)	109	66	3	0	0	3	0
Control Delay (s)	125.5	32.3	11.9	0.0	0.0	1.3	0.0
Lane LOS	F	D	B			A	
Approach Delay (s)	66.7		11.9	0.0		0.5	
Approach LOS	F		B				

Intersection Summary			
Average Delay	7.1		
Intersection Capacity Utilization	57.1%	ICU Level of Service	B
Analysis Period (min)	15		

Movement	EBL	EBT	WBT	WBR	SBL	SBR
Lane Configurations						
Sign Control		Free	Free		Stop	
Grade		0%	0%		0%	
Volume (veh/h)	0	1426	778	356	0	148
Peak Hour Factor	0.92	0.92	0.92	0.92	0.92	0.92
Hourly flow rate (vph)	0	1550	846	387	0	161
Pedestrians						
Lane Width (ft)						
Walking Speed (ft/s)						
Percent Blockage						
Right turn flare (veh)						
Median type					None	
Median storage veh)						
Upstream signal (ft)						
pX, platoon unblocked						
vC, conflicting volume	1233				1814	616
vC1, stage 1 conf vol						
vC2, stage 2 conf vol						
vCu, unblocked vol	1233				1814	616
tC, single (s)	4.1				6.8	6.9
tC, 2 stage (s)						
tF (s)	2.2				3.5	3.3
p0 queue free %	100				100	63
cM capacity (veh/h)	561				70	433

Direction, Lane #	EB 1	EB 2	WB 1	WB 2	SB 1
Volume Total	775	775	564	669	161
Volume Left	0	0	0	0	0
Volume Right	0	0	0	387	161
cSH	1700	1700	1700	1700	433
Volume to Capacity	0.46	0.46	0.33	0.39	0.37
Queue Length (ft)	0	0	0	0	42
Control Delay (s)	0.0	0.0	0.0	0.0	18.1
Lane LOS					C
Approach Delay (s)	0.0		0.0		18.1
Approach LOS					C

Intersection Summary			
Average Delay	1.0		
Intersection Capacity Utilization	48.7%	ICU Level of Service	A
Analysis Period (min)	15		

Movement	EBL	EBT	EBR	WBL	WBT	WBR	NBL	NBT	NBR	SBL	SBT	SBR
Lane Configurations												
Ideal Flow (vphpl)	1900	1900	1900	1900	1900	1900	1900	1900	1900	1900	1900	1900
Total Lost time (s)				4.0	4.0		4.0	4.0			4.0	4.0
Lane Util. Factor				0.97	1.00		1.00	0.95			0.91	1.00
Frt				1.00	0.90		1.00	1.00			1.00	0.85
Flt Protected				0.95	1.00		0.95	1.00			1.00	1.00
Satd. Flow (prot)				3433	1684		1770	3539			5085	1583
Flt Permitted				0.95	1.00		0.25	1.00			1.00	1.00
Satd. Flow (perm)				3433	1684		466	3539			5085	1583
Volume (vph)	0	0	0	503	229	409	296	1096	0	0	1305	439
Peak-hour factor, PHF	0.92	0.92	0.92	0.92	0.92	0.92	0.92	0.92	0.92	0.92	0.92	0.92
Adj. Flow (vph)	0	0	0	547	249	445	322	1191	0	0	1418	477
RTOR Reduction (vph)	0	0	0	0	11	0	0	0	0	0	0	286
Lane Group Flow (vph)	0	0	0	547	683	0	322	1191	0	0	1418	191
Turn Type				Perm			Perm					Perm
Protected Phases					8			2			6	
Permitted Phases				8			2					6
Actuated Green, G (s)				16.0	16.0		16.0	16.0			16.0	16.0
Effective Green, g (s)				16.0	16.0		16.0	16.0			16.0	16.0
Actuated g/C Ratio				0.40	0.40		0.40	0.40			0.40	0.40
Clearance Time (s)				4.0	4.0		4.0	4.0			4.0	4.0
Vehicle Extension (s)				3.0	3.0		3.0	3.0			3.0	3.0
Lane Grp Cap (vph)				1373	674		186	1416			2034	633
v/s Ratio Prot					c0.41			0.34			0.28	
v/s Ratio Perm				0.16			c0.69					0.30
v/c Ratio				0.40	1.01		1.73	0.84			0.70	0.30
Uniform Delay, d1				8.6	12.0		12.0	10.9			10.0	8.2
Progression Factor				1.00	1.00		0.84	0.82			1.00	1.00
Incremental Delay, d2				0.2	37.9		348.0	5.5			2.0	1.2
Delay (s)				8.8	49.9		358.1	14.3			12.0	9.4
Level of Service				A	D		F	B			B	A
Approach Delay (s)		0.0			31.8			87.5			11.3	
Approach LOS		A			C			F			B	

Intersection Summary			
HCM Average Control Delay	41.6	HCM Level of Service	D
HCM Volume to Capacity ratio	1.38		
Actuated Cycle Length (s)	40.0	Sum of lost time (s)	8.0
Intersection Capacity Utilization	90.7%	ICU Level of Service	E
Analysis Period (min)	15		
c Critical Lane Group			

Movement	EBL	EBT	EBR	WBL	WBT	WBR	NBL	NBT	NBR	SBL	SBT	SBR
Lane Configurations												
Ideal Flow (vphpl)	1900	1900	1900	1900	1900	1900	1900	1900	1900	1900	1900	1900
Total Lost time (s)	4.0	4.0	4.0					4.0	4.0	4.0	4.0	
Lane Util. Factor	1.00	1.00	1.00					0.91	1.00	1.00	0.95	
Frt	1.00	1.00	0.85					1.00	0.85	1.00	1.00	
Flt Protected	0.95	1.00	1.00					1.00	1.00	0.95	1.00	
Satd. Flow (prot)	1770	1863	1583					5085	1583	1770	3539	
Flt Permitted	0.95	1.00	1.00					1.00	1.00	0.25	1.00	
Satd. Flow (perm)	1770	1863	1583					5085	1583	464	3539	
Volume (vph)	434	106	422	0	0	0	0	913	334	391	1395	0
Peak-hour factor, PHF	0.92	0.92	0.92	0.92	0.92	0.92	0.92	0.92	0.92	0.92	0.92	0.92
Adj. Flow (vph)	472	115	459	0	0	0	0	992	363	425	1516	0
RTOR Reduction (vph)	0	0	4	0	0	0	0	0	205	0	0	0
Lane Group Flow (vph)	472	115	455	0	0	0	0	992	158	425	1516	0
Turn Type	Perm		Perm						Perm	Perm		
Protected Phases		4						2			6	
Permitted Phases	4		4						2	6		
Actuated Green, G (s)	14.6	14.6	14.6					17.4	17.4	17.4	17.4	
Effective Green, g (s)	14.6	14.6	14.6					17.4	17.4	17.4	17.4	
Actuated g/C Ratio	0.36	0.36	0.36					0.43	0.43	0.43	0.43	
Clearance Time (s)	4.0	4.0	4.0					4.0	4.0	4.0	4.0	
Vehicle Extension (s)	3.0	3.0	3.0					3.0	3.0	3.0	3.0	
Lane Grp Cap (vph)	646	680	578					2212	689	202	1539	
v/s Ratio Prot		0.06						0.20			0.43	
v/s Ratio Perm	0.27		0.29						0.23	c0.92		
v/c Ratio	0.73	0.17	0.79					0.45	0.23	2.10	0.99	
Uniform Delay, d1	11.0	8.6	11.3					7.9	7.1	11.3	11.2	
Progression Factor	1.00	1.00	1.00					1.00	1.00	0.67	0.66	
Incremental Delay, d2	4.2	0.1	7.0					0.7	0.8	509.9	17.2	
Delay (s)	15.2	8.7	18.3					8.6	7.9	517.5	24.5	
Level of Service	B	A	B					A	A	F	C	
Approach Delay (s)		15.9			0.0			8.4			132.5	
Approach LOS		B			A			A			F	

Intersection Summary			
HCM Average Control Delay	65.7	HCM Level of Service	E
HCM Volume to Capacity ratio	1.51		
Actuated Cycle Length (s)	40.0	Sum of lost time (s)	8.0
Intersection Capacity Utilization	90.7%	ICU Level of Service	E
Analysis Period (min)	15		
c Critical Lane Group			

Movement	EBL	EBT	EBR	WBL	WBT	WBR	NBL	NBT	NBR	SBL	SBT	SBR
Lane Configurations												
Sign Control		Stop			Stop			Free			Free	
Grade		0%			0%			0%			0%	
Volume (veh/h)	46	14	58	7	0	5	0	671	15	66	1011	0
Peak Hour Factor	0.92	0.92	0.92	0.92	0.92	0.92	0.92	0.92	0.92	0.92	0.92	0.92
Hourly flow rate (vph)	50	15	63	8	0	5	0	729	16	72	1099	0
Pedestrians												
Lane Width (ft)												
Walking Speed (ft/s)												
Percent Blockage												
Right turn flare (veh)												
Median type		None			None							
Median storage veh)												
Upstream signal (ft)												
pX, platoon unblocked												
vC, conflicting volume	1612	1988	549	1501	1980	373	1099			746		
vC1, stage 1 conf vol												
vC2, stage 2 conf vol												
vCu, unblocked vol	1612	1988	549	1501	1980	373	1099			746		
tC, single (s)	7.5	6.5	6.9	7.5	6.5	6.9	4.1			4.1		
tC, 2 stage (s)												
tF (s)	3.5	4.0	3.3	3.5	4.0	3.3	2.2			2.2		
p0 queue free %	22	72	87	86	100	99	100			92		
cM capacity (veh/h)	64	55	479	54	56	625	631			858		

Direction, Lane #	EB 1	EB 2	WB 1	NB 1	NB 2	SB 1	SB 2
Volume Total	50	78	13	486	259	438	733
Volume Left	50	0	8	0	0	72	0
Volume Right	0	63	5	0	16	0	0
cSH	64	192	87	1700	1700	858	1700
Volume to Capacity	0.78	0.41	0.15	0.29	0.15	0.08	0.43
Queue Length (ft)	88	46	13	0	0	7	0
Control Delay (s)	159.2	36.0	53.4	0.0	0.0	2.4	0.0
Lane LOS	F	E	F			A	
Approach Delay (s)	84.0		53.4	0.0		0.9	
Approach LOS	F		F				

Intersection Summary			
Average Delay	6.1		
Intersection Capacity Utilization	65.8%	ICU Level of Service	C
Analysis Period (min)	15		

Movement	EBL	EBT	WBT	WBR	SBL	SBR
Lane Configurations						
Sign Control		Free	Free		Stop	
Grade		0%	0%		0%	
Volume (veh/h)	0	1088	921	441	0	282
Peak Hour Factor	0.92	0.92	0.92	0.92	0.92	0.92
Hourly flow rate (vph)	0	1183	1001	479	0	307
Pedestrians						
Lane Width (ft)						
Walking Speed (ft/s)						
Percent Blockage						
Right turn flare (veh)						
Median type					None	
Median storage veh)						
Upstream signal (ft)						
pX, platoon unblocked						
vC, conflicting volume	1480				1832	740
vC1, stage 1 conf vol						
vC2, stage 2 conf vol						
vCu, unblocked vol	1480				1832	740
tC, single (s)	4.1				6.8	6.9
tC, 2 stage (s)						
tF (s)	2.2				3.5	3.3
p0 queue free %	100				100	15
cM capacity (veh/h)	451				68	359

Direction, Lane #	EB 1	EB 2	WB 1	WB 2	SB 1
Volume Total	591	591	667	813	307
Volume Left	0	0	0	0	0
Volume Right	0	0	0	479	307
cSH	1700	1700	1700	1700	359
Volume to Capacity	0.35	0.35	0.39	0.48	0.85
Queue Length (ft)	0	0	0	0	198
Control Delay (s)	0.0	0.0	0.0	0.0	52.3
Lane LOS					F
Approach Delay (s)	0.0		0.0		52.3
Approach LOS					F

Intersection Summary			
Average Delay	5.4		
Intersection Capacity Utilization	63.7%	ICU Level of Service	B
Analysis Period (min)	15		

Movement	EBL	EBT	EBR	WBL	WBT	WBR	NBL	NBT	NBR	SBL	SBT	SBR
Lane Configurations												
Ideal Flow (vphpl)	1900	1900	1900	1900	1900	1900	1900	1900	1900	1900	1900	1900
Total Lost time (s)				4.0	4.0		4.0	4.0			4.0	4.0
Lane Util. Factor				0.97	1.00		1.00	0.95			0.91	1.00
Frt				1.00	0.90		1.00	1.00			1.00	0.85
Flt Protected				0.95	1.00		0.95	1.00			1.00	1.00
Satd. Flow (prot)				3433	1675		1770	3539			5085	1583
Flt Permitted				0.95	1.00		0.24	1.00			1.00	1.00
Satd. Flow (perm)				3433	1675		444	3539			5085	1583
Volume (vph)	0	0	0	324	167	341	459	1658	0	0	1117	353
Peak-hour factor, PHF	0.92	0.92	0.92	0.92	0.92	0.92	0.92	0.92	0.92	0.92	0.92	0.92
Adj. Flow (vph)	0	0	0	352	182	371	499	1802	0	0	1214	384
RTOR Reduction (vph)	0	0	0	0	1	0	0	0	0	0	0	223
Lane Group Flow (vph)	0	0	0	352	552	0	499	1802	0	0	1214	161
Turn Type				Perm			Perm					Perm
Protected Phases					8			2			6	
Permitted Phases				8			2					6
Actuated Green, G (s)				15.2	15.2		16.8	16.8			16.8	16.8
Effective Green, g (s)				15.2	15.2		16.8	16.8			16.8	16.8
Actuated g/C Ratio				0.38	0.38		0.42	0.42			0.42	0.42
Clearance Time (s)				4.0	4.0		4.0	4.0			4.0	4.0
Vehicle Extension (s)				3.0	3.0		3.0	3.0			3.0	3.0
Lane Grp Cap (vph)				1305	637		186	1486			2136	665
v/s Ratio Prot					c0.33			0.51			0.24	
v/s Ratio Perm				0.10			c1.13					0.24
v/c Ratio				0.27	0.87		2.68	1.21			0.57	0.24
Uniform Delay, d1				8.6	11.5		11.6	11.6			8.8	7.5
Progression Factor				1.00	1.00		0.70	0.68			1.00	1.00
Incremental Delay, d2				0.1	11.9		764.4	98.8			1.1	0.9
Delay (s)				8.7	23.3		772.4	106.6			9.9	8.4
Level of Service				A	C		F	F			A	A
Approach Delay (s)		0.0			17.6			251.0			9.6	
Approach LOS		A			B			F			A	

Intersection Summary			
HCM Average Control Delay	126.7	HCM Level of Service	F
HCM Volume to Capacity ratio	1.82		
Actuated Cycle Length (s)	40.0	Sum of lost time (s)	8.0
Intersection Capacity Utilization	95.0%	ICU Level of Service	F
Analysis Period (min)	15		
c Critical Lane Group			

Movement	EBL	EBT	EBR	WBL	WBT	WBR	NBL	NBT	NBR	SBL	SBT	SBR
Lane Configurations												
Ideal Flow (vphpl)	1900	1900	1900	1900	1900	1900	1900	1900	1900	1900	1900	1900
Total Lost time (s)	4.0	4.0	4.0					4.0	4.0	4.0	4.0	
Lane Util. Factor	1.00	1.00	1.00					0.91	1.00	1.00	0.95	
Frt	1.00	1.00	0.85					1.00	0.85	1.00	1.00	
Flt Protected	0.95	1.00	1.00					1.00	1.00	0.95	1.00	
Satd. Flow (prot)	1770	1863	1583					5085	1583	1770	3539	
Flt Permitted	0.95	1.00	1.00					1.00	1.00	0.25	1.00	
Satd. Flow (perm)	1770	1863	1583					5085	1583	466	3539	
Volume (vph)	711	162	492	0	0	0	0	1421	197	327	1203	0
Peak-hour factor, PHF	0.92	0.92	0.92	0.92	0.92	0.92	0.92	0.92	0.92	0.92	0.92	0.92
Adj. Flow (vph)	773	176	535	0	0	0	0	1545	214	355	1308	0
RTOR Reduction (vph)	0	0	7	0	0	0	0	0	128	0	0	0
Lane Group Flow (vph)	773	176	528	0	0	0	0	1545	86	355	1308	0
Turn Type	Perm		Perm						Perm	Perm		
Protected Phases		4						2			6	
Permitted Phases	4		4						2	6		
Actuated Green, G (s)	16.0	16.0	16.0					16.0	16.0	16.0	16.0	
Effective Green, g (s)	16.0	16.0	16.0					16.0	16.0	16.0	16.0	
Actuated g/C Ratio	0.40	0.40	0.40					0.40	0.40	0.40	0.40	
Clearance Time (s)	4.0	4.0	4.0					4.0	4.0	4.0	4.0	
Vehicle Extension (s)	3.0	3.0	3.0					3.0	3.0	3.0	3.0	
Lane Grp Cap (vph)	708	745	633					2034	633	186	1416	
v/s Ratio Prot		0.09						0.30			0.37	
v/s Ratio Perm	0.44		0.34						0.14	c0.76		
v/c Ratio	1.09	0.24	0.83					0.76	0.14	1.91	0.92	
Uniform Delay, d1	12.0	8.0	10.8					10.3	7.6	12.0	11.4	
Progression Factor	1.00	1.00	1.00					1.00	1.00	0.68	0.66	
Incremental Delay, d2	61.6	0.2	9.2					2.7	0.4	426.4	10.6	
Delay (s)	73.6	8.1	20.0					13.1	8.1	434.6	18.2	
Level of Service	E	A	C					B	A	F	B	
Approach Delay (s)		46.5			0.0			12.5			107.0	
Approach LOS		D			A			B			F	

Intersection Summary			
HCM Average Control Delay	54.8	HCM Level of Service	D
HCM Volume to Capacity ratio	1.50		
Actuated Cycle Length (s)	40.0	Sum of lost time (s)	8.0
Intersection Capacity Utilization	95.0%	ICU Level of Service	F
Analysis Period (min)	15		
c Critical Lane Group			

Movement	EBL	EBT	EBR	WBL	WBT	WBR	NBL	NBT	NBR	SBL	SBT	SBR
Lane Configurations												
Sign Control		Stop			Stop			Free			Free	
Grade		0%			0%			0%			0%	
Volume (veh/h)	87	27	115	3	0	31	0	910	25	72	826	0
Peak Hour Factor	0.92	0.92	0.92	0.92	0.92	0.92	0.92	0.92	0.92	0.92	0.92	0.92
Hourly flow rate (vph)	95	29	125	3	0	34	0	989	27	78	898	0
Pedestrians												
Lane Width (ft)												
Walking Speed (ft/s)												
Percent Blockage												
Right turn flare (veh)												
Median type		None			None							
Median storage veh)												
Upstream signal (ft)												
pX, platoon unblocked												
vC, conflicting volume	1583	2071	449	1748	2057	508	898			1016		
vC1, stage 1 conf vol												
vC2, stage 2 conf vol												
vCu, unblocked vol	1583	2071	449	1748	2057	508	898			1016		
tC, single (s)	7.5	6.5	6.9	7.5	6.5	6.9	4.1			4.1		
tC, 2 stage (s)												
tF (s)	3.5	4.0	3.3	3.5	4.0	3.3	2.2			2.2		
p0 queue free %	0	38	78	84	100	93	100			88		
cM capacity (veh/h)	62	47	557	20	48	510	752			678		

Direction, Lane #	EB 1	EB 2	WB 1	NB 1	NB 2	SB 1	SB 2
Volume Total	95	154	37	659	357	378	599
Volume Left	95	0	3	0	0	78	0
Volume Right	0	125	34	0	27	0	0
cSH	62	183	160	1700	1700	678	1700
Volume to Capacity	1.52	0.85	0.23	0.39	0.21	0.12	0.35
Queue Length (ft)	208	151	21	0	0	10	0
Control Delay (s)	410.7	83.2	34.1	0.0	0.0	3.5	0.0
Lane LOS	F	F	D			A	
Approach Delay (s)	207.7		34.1	0.0		1.4	
Approach LOS	F		D				

Intersection Summary			
Average Delay	23.8		
Intersection Capacity Utilization	72.4%	ICU Level of Service	C
Analysis Period (min)	15		

Movement	EBL	EBT	WBT	WBR	SBL	SBR
Lane Configurations						
Sign Control		Free	Free		Stop	
Grade		0%	0%		0%	
Volume (veh/h)	0	1548	834	389	0	213
Peak Hour Factor	0.92	0.92	0.92	0.92	0.92	0.92
Hourly flow rate (vph)	0	1683	907	423	0	232
Pedestrians						
Lane Width (ft)						
Walking Speed (ft/s)						
Percent Blockage						
Right turn flare (veh)						
Median type					None	
Median storage veh)						
Upstream signal (ft)						
pX, platoon unblocked						
vC, conflicting volume	1329				1959	665
vC1, stage 1 conf vol						
vC2, stage 2 conf vol						
vCu, unblocked vol	1329				1959	665
tC, single (s)	4.1				6.8	6.9
tC, 2 stage (s)						
tF (s)	2.2				3.5	3.3
p0 queue free %	100				100	43
cM capacity (veh/h)	515				56	403

Direction, Lane #	EB 1	EB 2	WB 1	WB 2	SB 1
Volume Total	841	841	604	725	232
Volume Left	0	0	0	0	0
Volume Right	0	0	0	423	232
cSH	1700	1700	1700	1700	403
Volume to Capacity	0.49	0.49	0.36	0.43	0.57
Queue Length (ft)	0	0	0	0	87
Control Delay (s)	0.0	0.0	0.0	0.0	25.3
Lane LOS					D
Approach Delay (s)	0.0		0.0		25.3
Approach LOS					D

Intersection Summary			
Average Delay	1.8		
Intersection Capacity Utilization	55.4%	ICU Level of Service	B
Analysis Period (min)	15		

Movement	EBL	EBT	EBR	WBL	WBT	WBR	NBL	NBT	NBR	SBL	SBT	SBR
Lane Configurations												
Ideal Flow (vphpl)	1900	1900	1900	1900	1900	1900	1900	1900	1900	1900	1900	1900
Total Lost time (s)				4.0	4.0		4.0	4.0			4.0	4.0
Lane Util. Factor				0.97	1.00		1.00	0.95			0.91	1.00
Frt				1.00	0.90		1.00	1.00			1.00	0.85
Flt Protected				0.95	1.00		0.95	1.00			1.00	1.00
Satd. Flow (prot)				3433	1678		1770	3539			5085	1583
Flt Permitted				0.95	1.00		0.25	1.00			1.00	1.00
Satd. Flow (perm)				3433	1678		466	3539			5085	1583
Volume (vph)	0	0	0	503	229	448	296	1163	0	0	1409	563
Peak-hour factor, PHF	0.92	0.92	0.92	0.92	0.92	0.92	0.92	0.92	0.92	0.92	0.92	0.92
Adj. Flow (vph)	0	0	0	547	249	487	322	1264	0	0	1532	612
RTOR Reduction (vph)	0	0	0	0	9	0	0	0	0	0	0	294
Lane Group Flow (vph)	0	0	0	547	727	0	322	1264	0	0	1532	318
Turn Type				Perm			Perm					Perm
Protected Phases					8			2			6	
Permitted Phases				8			2					6
Actuated Green, G (s)				16.0	16.0		16.0	16.0			16.0	16.0
Effective Green, g (s)				16.0	16.0		16.0	16.0			16.0	16.0
Actuated g/C Ratio				0.40	0.40		0.40	0.40			0.40	0.40
Clearance Time (s)				4.0	4.0		4.0	4.0			4.0	4.0
Vehicle Extension (s)				3.0	3.0		3.0	3.0			3.0	3.0
Lane Grp Cap (vph)				1373	671		186	1416			2034	633
v/s Ratio Prot					c0.44			0.36			0.30	
v/s Ratio Perm				0.16			c0.69					0.39
v/c Ratio				0.40	1.08		1.73	0.89			0.75	0.50
Uniform Delay, d1				8.6	12.0		12.0	11.2			10.3	9.0
Progression Factor				1.00	1.00		0.84	0.83			1.00	1.00
Incremental Delay, d2				0.2	59.5		347.2	7.6			2.6	2.8
Delay (s)				8.8	71.5		357.3	17.0			12.9	11.8
Level of Service				A	E		F	B			B	B
Approach Delay (s)		0.0			44.8			86.1			12.6	
Approach LOS		A			D			F			B	

Intersection Summary			
HCM Average Control Delay	44.1	HCM Level of Service	D
HCM Volume to Capacity ratio	1.41		
Actuated Cycle Length (s)	40.0	Sum of lost time (s)	8.0
Intersection Capacity Utilization	100.8%	ICU Level of Service	G
Analysis Period (min)	15		
c Critical Lane Group			

Movement	EBL	EBT	EBR	WBL	WBT	WBR	NBL	NBT	NBR	SBL	SBT	SBR
Lane Configurations												
Ideal Flow (vphpl)	1900	1900	1900	1900	1900	1900	1900	1900	1900	1900	1900	1900
Total Lost time (s)	4.0	4.0	4.0					4.0	4.0	4.0	4.0	
Lane Util. Factor	1.00	1.00	1.00					0.91	1.00	1.00	0.95	
Frt	1.00	1.00	0.85					1.00	0.85	1.00	1.00	
Flt Protected	0.95	1.00	1.00					1.00	1.00	0.95	1.00	
Satd. Flow (prot)	1770	1863	1583					5085	1583	1770	3539	
Flt Permitted	0.95	1.00	1.00					1.00	1.00	0.24	1.00	
Satd. Flow (perm)	1770	1863	1583					5085	1583	448	3539	
Volume (vph)	497	106	422	0	0	0	0	929	334	470	1426	0
Peak-hour factor, PHF	0.92	0.92	0.92	0.92	0.92	0.92	0.92	0.92	0.92	0.92	0.92	0.92
Adj. Flow (vph)	540	115	459	0	0	0	0	1010	363	511	1550	0
RTOR Reduction (vph)	0	0	3	0	0	0	0	0	209	0	0	0
Lane Group Flow (vph)	540	115	456	0	0	0	0	1010	154	511	1550	0
Turn Type	Perm		Perm						Perm	Perm		
Protected Phases		4						2			6	
Permitted Phases	4		4						2	6		
Actuated Green, G (s)	15.0	15.0	15.0					17.0	17.0	17.0	17.0	
Effective Green, g (s)	15.0	15.0	15.0					17.0	17.0	17.0	17.0	
Actuated g/C Ratio	0.38	0.38	0.38					0.42	0.42	0.42	0.42	
Clearance Time (s)	4.0	4.0	4.0					4.0	4.0	4.0	4.0	
Vehicle Extension (s)	3.0	3.0	3.0					3.0	3.0	3.0	3.0	
Lane Grp Cap (vph)	664	699	594					2161	673	190	1504	
v/s Ratio Prot		0.06						0.20			0.44	
v/s Ratio Perm	0.31		0.29						0.23	c1.14		
v/c Ratio	0.81	0.16	0.77					0.47	0.23	2.69	1.03	
Uniform Delay, d1	11.2	8.3	11.0					8.3	7.3	11.5	11.5	
Progression Factor	1.00	1.00	1.00					1.00	1.00	0.64	0.62	
Incremental Delay, d2	7.5	0.1	5.9					0.7	0.8	771.3	28.4	
Delay (s)	18.8	8.4	16.9					9.0	8.1	778.7	35.5	
Level of Service	B	A	B					A	A	F	D	
Approach Delay (s)		16.9			0.0			8.8			219.7	
Approach LOS		B			A			A			F	

Intersection Summary			
HCM Average Control Delay	106.4	HCM Level of Service	F
HCM Volume to Capacity ratio	1.81		
Actuated Cycle Length (s)	40.0	Sum of lost time (s)	8.0
Intersection Capacity Utilization	100.8%	ICU Level of Service	G
Analysis Period (min)	15		
c Critical Lane Group			

Movement	EBL	EBT	EBR	WBL	WBT	WBR	NBL	NBT	NBR	SBL	SBT	SBR
Lane Configurations												
Sign Control		Stop			Stop			Free			Free	
Grade		0%			0%			0%			0%	
Volume (veh/h)	54	14	58	7	0	5	0	677	15	66	1031	0
Peak Hour Factor	0.92	0.92	0.92	0.92	0.92	0.92	0.92	0.92	0.92	0.92	0.92	0.92
Hourly flow rate (vph)	59	15	63	8	0	5	0	736	16	72	1121	0
Pedestrians												
Lane Width (ft)												
Walking Speed (ft/s)												
Percent Blockage												
Right turn flare (veh)												
Median type		None			None							
Median storage veh)												
Upstream signal (ft)												
pX, platoon unblocked												
vC, conflicting volume	1638	2016	560	1518	2008	376	1121			752		
vC1, stage 1 conf vol												
vC2, stage 2 conf vol												
vCu, unblocked vol	1638	2016	560	1518	2008	376	1121			752		
tC, single (s)	7.5	6.5	6.9	7.5	6.5	6.9	4.1			4.1		
tC, 2 stage (s)												
tF (s)	3.5	4.0	3.3	3.5	4.0	3.3	2.2			2.2		
p0 queue free %	5	71	87	85	100	99	100			92		
cM capacity (veh/h)	62	53	471	52	54	621	619			853		

Direction, Lane #	EB 1	EB 2	WB 1	NB 1	NB 2	SB 1	SB 2
Volume Total	59	78	13	491	262	445	747
Volume Left	59	0	8	0	0	72	0
Volume Right	0	63	5	0	16	0	0
cSH	62	186	84	1700	1700	853	1700
Volume to Capacity	0.95	0.42	0.16	0.29	0.15	0.08	0.44
Queue Length (ft)	113	48	13	0	0	7	0
Control Delay (s)	211.2	37.8	55.9	0.0	0.0	2.4	0.0
Lane LOS	F	E	F			A	
Approach Delay (s)	112.1		55.9	0.0		0.9	
Approach LOS	F		F				

Intersection Summary			
Average Delay	8.2		
Intersection Capacity Utilization	66.5%	ICU Level of Service	C
Analysis Period (min)	15		

Movement	EBL	EBT	WBT	WBR	SBL	SBR
Lane Configurations						
Sign Control		Free	Free		Stop	
Grade		0%	0%		0%	
Volume (veh/h)	0	1174	937	441	0	323
Peak Hour Factor	0.92	0.92	0.92	0.92	0.92	0.92
Hourly flow rate (vph)	0	1276	1018	479	0	351
Pedestrians						
Lane Width (ft)						
Walking Speed (ft/s)						
Percent Blockage						
Right turn flare (veh)						
Median type					None	
Median storage veh)						
Upstream signal (ft)						
pX, platoon unblocked						
vC, conflicting volume	1498				1896	749
vC1, stage 1 conf vol						
vC2, stage 2 conf vol						
vCu, unblocked vol	1498				1896	749
tC, single (s)	4.1				6.8	6.9
tC, 2 stage (s)						
tF (s)	2.2				3.5	3.3
p0 queue free %	100				100	1
cM capacity (veh/h)	444				61	354

Direction, Lane #	EB 1	EB 2	WB 1	WB 2	SB 1
Volume Total	638	638	679	819	351
Volume Left	0	0	0	0	0
Volume Right	0	0	0	479	351
cSH	1700	1700	1700	1700	354
Volume to Capacity	0.38	0.38	0.40	0.48	0.99
Queue Length (ft)	0	0	0	0	282
Control Delay (s)	0.0	0.0	0.0	0.0	80.4
Lane LOS					F
Approach Delay (s)	0.0		0.0		80.4
Approach LOS					F

Intersection Summary			
Average Delay	9.0		
Intersection Capacity Utilization	66.7%	ICU Level of Service	C
Analysis Period (min)	15		

Movement	EBL	EBT	EBR	WBL	WBT	WBR	NBL	NBT	NBR	SBL	SBT	SBR
Lane Configurations												
Ideal Flow (vphpl)	1900	1900	1900	1900	1900	1900	1900	1900	1900	1900	1900	1900
Total Lost time (s)				4.0	4.0		4.0	4.0			4.0	4.0
Lane Util. Factor				0.97	1.00		1.00	0.95			0.91	1.00
Frt				1.00	0.89		1.00	1.00			1.00	0.85
Flt Protected				0.95	1.00		0.95	1.00			1.00	1.00
Satd. Flow (prot)				3433	1656		1770	3539			5085	1583
Flt Permitted				0.95	1.00		0.25	1.00			1.00	1.00
Satd. Flow (perm)				3433	1656		466	3539			5085	1583
Volume (vph)	0	0	0	324	167	476	459	1903	0	0	1237	494
Peak-hour factor, PHF	0.92	0.92	0.92	0.92	0.92	0.92	0.92	0.92	0.92	0.92	0.92	0.92
Adj. Flow (vph)	0	0	0	352	182	517	499	2068	0	0	1345	537
RTOR Reduction (vph)	0	0	0	0	1	0	0	0	0	0	0	322
Lane Group Flow (vph)	0	0	0	352	698	0	499	2068	0	0	1345	215
Turn Type				Perm			Perm					Perm
Protected Phases					8			2			6	
Permitted Phases				8			2					6
Actuated Green, G (s)				16.0	16.0		16.0	16.0			16.0	16.0
Effective Green, g (s)				16.0	16.0		16.0	16.0			16.0	16.0
Actuated g/C Ratio				0.40	0.40		0.40	0.40			0.40	0.40
Clearance Time (s)				4.0	4.0		4.0	4.0			4.0	4.0
Vehicle Extension (s)				3.0	3.0		3.0	3.0			3.0	3.0
Lane Grp Cap (vph)				1373	662		186	1416			2034	633
v/s Ratio Prot					c0.42			0.58			0.26	
v/s Ratio Perm				0.10			c1.07					0.34
v/c Ratio				0.26	1.05		2.68	1.46			0.66	0.34
Uniform Delay, d1				8.0	12.0		12.0	12.0			9.8	8.3
Progression Factor				1.00	1.00		0.76	0.76			1.00	1.00
Incremental Delay, d2				0.1	50.4		758.6	207.6			1.7	1.5
Delay (s)				8.1	62.4		767.8	216.7			11.5	9.8
Level of Service				A	E		F	F			B	A
Approach Delay (s)		0.0			44.2			323.9			11.0	
Approach LOS		A			D			F			B	

Intersection Summary			
HCM Average Control Delay	163.4	HCM Level of Service	F
HCM Volume to Capacity ratio	1.87		
Actuated Cycle Length (s)	40.0	Sum of lost time (s)	8.0
Intersection Capacity Utilization	113.0%	ICU Level of Service	H
Analysis Period (min)	15		
c Critical Lane Group			

Movement	EBL	EBT	EBR	WBL	WBT	WBR	NBL	NBT	NBR	SBL	SBT	SBR
Lane Configurations												
Ideal Flow (vphpl)	1900	1900	1900	1900	1900	1900	1900	1900	1900	1900	1900	1900
Total Lost time (s)	4.0	4.0	4.0					4.0	4.0	4.0	4.0	
Lane Util. Factor	1.00	1.00	1.00					0.91	1.00	1.00	0.95	
Frt	1.00	1.00	0.85					1.00	0.85	1.00	1.00	
Flt Protected	0.95	1.00	1.00					1.00	1.00	0.95	1.00	
Satd. Flow (prot)	1770	1863	1583					5085	1583	1770	3539	
Flt Permitted	0.95	1.00	1.00					1.00	1.00	0.25	1.00	
Satd. Flow (perm)	1770	1863	1583					5085	1583	466	3539	
Volume (vph)	926	162	492	0	0	0	0	1476	197	419	1239	0
Peak-hour factor, PHF	0.92	0.92	0.92	0.92	0.92	0.92	0.92	0.92	0.92	0.92	0.92	0.92
Adj. Flow (vph)	1007	176	535	0	0	0	0	1604	214	455	1347	0
RTOR Reduction (vph)	0	0	7	0	0	0	0	0	128	0	0	0
Lane Group Flow (vph)	1007	176	528	0	0	0	0	1604	86	455	1347	0
Turn Type	Perm		Perm						Perm	Perm		
Protected Phases		4						2			6	
Permitted Phases	4		4						2	6		
Actuated Green, G (s)	16.0	16.0	16.0					16.0	16.0	16.0	16.0	
Effective Green, g (s)	16.0	16.0	16.0					16.0	16.0	16.0	16.0	
Actuated g/C Ratio	0.40	0.40	0.40					0.40	0.40	0.40	0.40	
Clearance Time (s)	4.0	4.0	4.0					4.0	4.0	4.0	4.0	
Vehicle Extension (s)	3.0	3.0	3.0					3.0	3.0	3.0	3.0	
Lane Grp Cap (vph)	708	745	633					2034	633	186	1416	
v/s Ratio Prot		0.09						0.32			0.38	
v/s Ratio Perm	0.57		0.34						0.14	c0.98		
v/c Ratio	1.42	0.24	0.83					0.79	0.14	2.45	0.95	
Uniform Delay, d1	12.0	8.0	10.8					10.5	7.6	12.0	11.6	
Progression Factor	1.00	1.00	1.00					1.00	1.00	0.62	0.59	
Incremental Delay, d2	198.3	0.2	9.3					3.2	0.4	664.4	13.2	
Delay (s)	210.3	8.1	20.1					13.7	8.1	671.9	20.0	
Level of Service	F	A	C					B	A	F	B	
Approach Delay (s)		130.3			0.0			13.0			184.6	
Approach LOS		F			A			B			F	

Intersection Summary			
HCM Average Control Delay	108.7	HCM Level of Service	F
HCM Volume to Capacity ratio	1.93		
Actuated Cycle Length (s)	40.0	Sum of lost time (s)	8.0
Intersection Capacity Utilization	113.0%	ICU Level of Service	H
Analysis Period (min)	15		
c Critical Lane Group			

Movement	EBL	EBT	EBR	WBL	WBT	WBR	NBL	NBT	NBR	SBL	SBT	SBR
Lane Configurations												
Sign Control		Stop			Stop			Free			Free	
Grade		0%			0%			0%			0%	
Volume (veh/h)	111	27	115	3	0	31	0	931	25	72	847	0
Peak Hour Factor	0.92	0.92	0.92	0.92	0.92	0.92	0.92	0.92	0.92	0.92	0.92	0.92
Hourly flow rate (vph)	121	29	125	3	0	34	0	1012	27	78	921	0
Pedestrians												
Lane Width (ft)												
Walking Speed (ft/s)												
Percent Blockage												
Right turn flare (veh)												
Median type		None			None							
Median storage veh)												
Upstream signal (ft)												
pX, platoon unblocked												
vC, conflicting volume	1617	2116	460	1782	2103	520	921			1039		
vC1, stage 1 conf vol												
vC2, stage 2 conf vol												
vCu, unblocked vol	1617	2116	460	1782	2103	520	921			1039		
tC, single (s)	7.5	6.5	6.9	7.5	6.5	6.9	4.1			4.1		
tC, 2 stage (s)												
tF (s)	3.5	4.0	3.3	3.5	4.0	3.3	2.2			2.2		
p0 queue free %	0	33	77	81	100	93	100			88		
cM capacity (veh/h)	58	44	548	17	45	501	737			665		

Direction, Lane #	EB 1	EB 2	WB 1	NB 1	NB 2	SB 1	SB 2
Volume Total	121	154	37	675	364	385	614
Volume Left	121	0	3	0	0	78	0
Volume Right	0	125	34	0	27	0	0
cSH	58	173	143	1700	1700	665	1700
Volume to Capacity	2.06	0.89	0.26	0.40	0.21	0.12	0.36
Queue Length (ft)	291	164	24	0	0	10	0
Control Delay (s)	644.5	96.5	38.7	0.0	0.0	3.5	0.0
Lane LOS	F	F	E			A	
Approach Delay (s)	337.0		38.7	0.0		1.4	
Approach LOS	F		E				

Intersection Summary			
Average Delay	40.6		
Intersection Capacity Utilization	74.9%	ICU Level of Service	D
Analysis Period (min)	15		

Movement	EBL	EBT	WBT	WBR	SBL	SBR
Lane Configurations						
Sign Control		Free	Free		Stop	
Grade		0%	0%		0%	
Volume (veh/h)	0	1649	898	389	0	351
Peak Hour Factor	0.92	0.92	0.92	0.92	0.92	0.92
Hourly flow rate (vph)	0	1792	976	423	0	382
Pedestrians						
Lane Width (ft)						
Walking Speed (ft/s)						
Percent Blockage						
Right turn flare (veh)						
Median type					None	
Median storage veh)						
Upstream signal (ft)						
pX, platoon unblocked						
vC, conflicting volume	1399				2084	699
vC1, stage 1 conf vol						
vC2, stage 2 conf vol						
vCu, unblocked vol	1399				2084	699
tC, single (s)	4.1				6.8	6.9
tC, 2 stage (s)						
tF (s)	2.2				3.5	3.3
p0 queue free %	100				100	0
cM capacity (veh/h)	484				46	382

Direction, Lane #	EB 1	EB 2	WB 1	WB 2	SB 1
Volume Total	896	896	651	748	382
Volume Left	0	0	0	0	0
Volume Right	0	0	0	423	382
cSH	1700	1700	1700	1700	382
Volume to Capacity	0.53	0.53	0.38	0.44	1.00
Queue Length (ft)	0	0	0	0	298
Control Delay (s)	0.0	0.0	0.0	0.0	79.2
Lane LOS					F
Approach Delay (s)	0.0		0.0		79.2
Approach LOS					F

Intersection Summary			
Average Delay	8.5		
Intersection Capacity Utilization	65.7%	ICU Level of Service	C
Analysis Period (min)	15		

Movement	EBL	EBT	EBR	WBL	WBT	WBR	NBL	NBT	NBR	SBL	SBT	SBR
Lane Configurations												
Ideal Flow (vphpl)	1900	1900	1900	1900	1900	1900	1900	1900	1900	1900	1900	1900
Total Lost time (s)				4.0	4.0		4.0	4.0			4.0	4.0
Lane Util. Factor				0.97	1.00		1.00	0.95			0.91	1.00
Frt				1.00	0.90		1.00	1.00			1.00	0.85
Flt Protected				0.95	1.00		0.95	1.00			1.00	1.00
Satd. Flow (prot)				3433	1684		1770	3539			5085	1583
Flt Permitted				0.95	1.00		0.25	1.00			1.00	1.00
Satd. Flow (perm)				3433	1684		466	3539			5085	1583
Volume (vph)	0	0	0	541	246	439	318	1175	0	0	1399	469
Peak-hour factor, PHF	0.92	0.92	0.92	0.92	0.92	0.92	0.92	0.92	0.92	0.92	0.92	0.92
Adj. Flow (vph)	0	0	0	588	267	477	346	1277	0	0	1521	510
RTOR Reduction (vph)	0	0	0	0	8	0	0	0	0	0	0	277
Lane Group Flow (vph)	0	0	0	588	736	0	346	1277	0	0	1521	233
Turn Type				Perm			Perm					Perm
Protected Phases					8			2			6	
Permitted Phases				8			2					6
Actuated Green, G (s)				16.0	16.0		16.0	16.0			16.0	16.0
Effective Green, g (s)				16.0	16.0		16.0	16.0			16.0	16.0
Actuated g/C Ratio				0.40	0.40		0.40	0.40			0.40	0.40
Clearance Time (s)				4.0	4.0		4.0	4.0			4.0	4.0
Vehicle Extension (s)				3.0	3.0		3.0	3.0			3.0	3.0
Lane Grp Cap (vph)				1373	674		186	1416			2034	633
v/s Ratio Prot					c0.44			0.36			0.30	
v/s Ratio Perm				0.17			c0.74					0.32
v/c Ratio				0.43	1.09		1.86	0.90			0.75	0.37
Uniform Delay, d1				8.7	12.0		12.0	11.3			10.3	8.4
Progression Factor				1.00	1.00		0.81	0.79			1.00	1.00
Incremental Delay, d2				0.2	62.2		404.1	8.3			2.6	1.6
Delay (s)				8.9	74.2		413.8	17.3			12.8	10.1
Level of Service				A	E		F	B			B	B
Approach Delay (s)		0.0			45.4			101.8			12.1	
Approach LOS		A			D			F			B	

Intersection Summary			
HCM Average Control Delay	50.2	HCM Level of Service	D
HCM Volume to Capacity ratio	1.48		
Actuated Cycle Length (s)	40.0	Sum of lost time (s)	8.0
Intersection Capacity Utilization	96.5%	ICU Level of Service	F
Analysis Period (min)	15		
c Critical Lane Group			

Movement	EBL	EBT	EBR	WBL	WBT	WBR	NBL	NBT	NBR	SBL	SBT	SBR
Lane Configurations												
Ideal Flow (vphpl)	1900	1900	1900	1900	1900	1900	1900	1900	1900	1900	1900	1900
Total Lost time (s)	4.0	4.0	4.0					4.0	4.0	4.0	4.0	
Lane Util. Factor	1.00	1.00	1.00					0.91	1.00	1.00	0.95	
Frt	1.00	1.00	0.85					1.00	0.85	1.00	1.00	
Flt Protected	0.95	1.00	1.00					1.00	1.00	0.95	1.00	
Satd. Flow (prot)	1770	1863	1583					5085	1583	1770	3539	
Flt Permitted	0.95	1.00	1.00					1.00	1.00	0.24	1.00	
Satd. Flow (perm)	1770	1863	1583					5085	1583	438	3539	
Volume (vph)	467	114	454	0	0	0	0	978	360	418	1499	0
Peak-hour factor, PHF	0.92	0.92	0.92	0.92	0.92	0.92	0.92	0.92	0.92	0.92	0.92	0.92
Adj. Flow (vph)	508	124	493	0	0	0	0	1063	391	454	1629	0
RTOR Reduction (vph)	0	0	3	0	0	0	0	0	225	0	0	0
Lane Group Flow (vph)	508	124	491	0	0	0	0	1063	166	454	1629	0
Turn Type	Perm		Perm						Perm	Perm		
Protected Phases		4						2			6	
Permitted Phases	4		4						2	6		
Actuated Green, G (s)	15.0	15.0	15.0					17.0	17.0	17.0	17.0	
Effective Green, g (s)	15.0	15.0	15.0					17.0	17.0	17.0	17.0	
Actuated g/C Ratio	0.38	0.38	0.38					0.42	0.42	0.42	0.42	
Clearance Time (s)	4.0	4.0	4.0					4.0	4.0	4.0	4.0	
Vehicle Extension (s)	3.0	3.0	3.0					3.0	3.0	3.0	3.0	
Lane Grp Cap (vph)	664	699	594					2161	673	186	1504	
v/s Ratio Prot		0.07						0.21			0.46	
v/s Ratio Perm	0.29		0.31						0.25	c1.04		
v/c Ratio	0.77	0.18	0.83					0.49	0.25	2.44	1.08	
Uniform Delay, d1	11.0	8.4	11.3					8.4	7.4	11.5	11.5	
Progression Factor	1.00	1.00	1.00					1.00	1.00	0.65	0.65	
Incremental Delay, d2	5.2	0.1	9.2					0.8	0.9	660.4	46.7	
Delay (s)	16.2	8.5	20.5					9.2	8.3	667.9	54.2	
Level of Service	B	A	C					A	A	F	D	
Approach Delay (s)		17.2			0.0			8.9			188.0	
Approach LOS		B			A			A			F	

Intersection Summary			
HCM Average Control Delay	90.9	HCM Level of Service	F
HCM Volume to Capacity ratio	1.68		
Actuated Cycle Length (s)	40.0	Sum of lost time (s)	8.0
Intersection Capacity Utilization	96.5%	ICU Level of Service	F
Analysis Period (min)	15		
c Critical Lane Group			

Movement	EBL	EBT	EBR	WBL	WBT	WBR	NBL	NBT	NBR	SBL	SBT	SBR
Lane Configurations												
Sign Control		Stop			Stop			Free			Free	
Grade		0%			0%			0%			0%	
Volume (veh/h)	48	15	61	7	0	55	0	722	16	67	1092	0
Peak Hour Factor	0.92	0.92	0.92	0.92	0.92	0.92	0.92	0.92	0.92	0.92	0.92	0.92
Hourly flow rate (vph)	52	16	66	8	0	60	0	785	17	73	1187	0
Pedestrians												
Lane Width (ft)												
Walking Speed (ft/s)												
Percent Blockage												
Right turn flare (veh)												
Median type		None			None							
Median storage veh)												
Upstream signal (ft)												
pX, platoon unblocked												
vC, conflicting volume	1785	2135	593	1607	2126	401	1187			802		
vC1, stage 1 conf vol												
vC2, stage 2 conf vol												
vCu, unblocked vol	1785	2135	593	1607	2126	401	1187			802		
tC, single (s)	7.5	6.5	6.9	7.5	6.5	6.9	4.1			4.1		
tC, 2 stage (s)												
tF (s)	3.5	4.0	3.3	3.5	4.0	3.3	2.2			2.2		
p0 queue free %	0	63	85	81	100	90	100			91		
cM capacity (veh/h)	43	44	448	40	45	599	584			817		

Direction, Lane #	EB 1	EB 2	WB 1	NB 1	NB 2	SB 1	SB 2
Volume Total	52	83	67	523	279	468	791
Volume Left	52	0	8	0	0	73	0
Volume Right	0	66	60	0	17	0	0
cSH	43	160	232	1700	1700	817	1700
Volume to Capacity	1.21	0.52	0.29	0.31	0.16	0.09	0.47
Queue Length (ft)	126	63	29	0	0	7	0
Control Delay (s)	353.5	49.2	26.8	0.0	0.0	2.5	0.0
Lane LOS	F	E	D			A	
Approach Delay (s)	167.0		26.8	0.0		0.9	
Approach LOS	F		D				

Intersection Summary			
Average Delay	11.3		
Intersection Capacity Utilization	72.7%	ICU Level of Service	C
Analysis Period (min)	15		

Movement	EBL	EBT	WBT	WBR	SBL	SBR
Lane Configurations						
Sign Control		Free	Free		Stop	
Grade		0%	0%		0%	
Volume (veh/h)	0	1171	993	475	0	300
Peak Hour Factor	0.92	0.92	0.92	0.92	0.92	0.92
Hourly flow rate (vph)	0	1273	1079	516	0	326
Pedestrians						
Lane Width (ft)						
Walking Speed (ft/s)						
Percent Blockage						
Right turn flare (veh)						
Median type					None	
Median storage veh)						
Upstream signal (ft)						
pX, platoon unblocked						
vC, conflicting volume	1596				1974	798
vC1, stage 1 conf vol						
vC2, stage 2 conf vol						
vCu, unblocked vol	1596				1974	798
tC, single (s)	4.1				6.8	6.9
tC, 2 stage (s)						
tF (s)	2.2				3.5	3.3
p0 queue free %	100				100	1
cM capacity (veh/h)	407				54	329

Direction, Lane #	EB 1	EB 2	WB 1	WB 2	SB 1
Volume Total	636	636	720	876	326
Volume Left	0	0	0	0	0
Volume Right	0	0	0	516	326
cSH	1700	1700	1700	1700	329
Volume to Capacity	0.37	0.37	0.42	0.52	0.99
Queue Length (ft)	0	0	0	0	272
Control Delay (s)	0.0	0.0	0.0	0.0	83.8
Lane LOS					F
Approach Delay (s)	0.0		0.0		83.8
Approach LOS					F

Intersection Summary			
Average Delay	8.6		
Intersection Capacity Utilization	67.9%	ICU Level of Service	C
Analysis Period (min)	15		

Movement	EBL	EBT	EBR	WBL	WBT	WBR	NBL	NBT	NBR	SBL	SBT	SBR
Lane Configurations												
Ideal Flow (vphpl)	1900	1900	1900	1900	1900	1900	1900	1900	1900	1900	1900	1900
Total Lost time (s)				4.0	4.0		4.0	4.0			4.0	4.0
Lane Util. Factor				0.97	1.00		1.00	0.95			0.91	1.00
Frt				1.00	0.90		1.00	1.00			1.00	0.85
Flt Protected				0.95	1.00		0.95	1.00			1.00	1.00
Satd. Flow (prot)				3433	1676		1770	3539			5085	1583
Flt Permitted				0.95	1.00		0.24	1.00			1.00	1.00
Satd. Flow (perm)				3433	1676		452	3539			5085	1583
Volume (vph)	0	0	0	349	179	364	494	1778	0	0	1194	379
Peak-hour factor, PHF	0.92	0.92	0.92	0.92	0.92	0.92	0.92	0.92	0.92	0.92	0.92	0.92
Adj. Flow (vph)	0	0	0	379	195	396	537	1933	0	0	1298	412
RTOR Reduction (vph)	0	0	0	0	1	0	0	0	0	0	0	242
Lane Group Flow (vph)	0	0	0	379	590	0	537	1933	0	0	1298	170
Turn Type				Perm			Perm					Perm
Protected Phases					8			2			6	
Permitted Phases				8			2					6
Actuated Green, G (s)				15.5	15.5		16.5	16.5			16.5	16.5
Effective Green, g (s)				15.5	15.5		16.5	16.5			16.5	16.5
Actuated g/C Ratio				0.39	0.39		0.41	0.41			0.41	0.41
Clearance Time (s)				4.0	4.0		4.0	4.0			4.0	4.0
Vehicle Extension (s)				3.0	3.0		3.0	3.0			3.0	3.0
Lane Grp Cap (vph)				1330	649		186	1460			2098	653
v/s Ratio Prot					c0.35			0.55			0.26	
v/s Ratio Perm				0.11			c1.19					0.26
v/c Ratio				0.28	0.91		2.89	1.32			0.62	0.26
Uniform Delay, d1				8.4	11.6		11.8	11.8			9.3	7.7
Progression Factor				1.00	1.00		0.68	0.67			1.00	1.00
Incremental Delay, d2				0.1	16.6		854.4	147.5			1.4	1.0
Delay (s)				8.6	28.2		862.4	155.4			10.6	8.7
Level of Service				A	C		F	F			B	A
Approach Delay (s)		0.0			20.5			309.1			10.2	
Approach LOS		A			C			F			B	

Intersection Summary			
HCM Average Control Delay	155.5	HCM Level of Service	F
HCM Volume to Capacity ratio	1.93		
Actuated Cycle Length (s)	40.0	Sum of lost time (s)	8.0
Intersection Capacity Utilization	101.1%	ICU Level of Service	G
Analysis Period (min)	15		
c Critical Lane Group			

Movement	EBL	EBT	EBR	WBL	WBT	WBR	NBL	NBT	NBR	SBL	SBT	SBR
Lane Configurations												
Ideal Flow (vphpl)	1900	1900	1900	1900	1900	1900	1900	1900	1900	1900	1900	1900
Total Lost time (s)	4.0	4.0	4.0					4.0	4.0	4.0	4.0	
Lane Util. Factor	1.00	1.00	1.00					0.91	1.00	1.00	0.95	
Frt	1.00	1.00	0.85					1.00	0.85	1.00	1.00	
Flt Protected	0.95	1.00	1.00					1.00	1.00	0.95	1.00	
Satd. Flow (prot)	1770	1863	1583					5085	1583	1770	3539	
Flt Permitted	0.95	1.00	1.00					1.00	1.00	0.25	1.00	
Satd. Flow (perm)	1770	1863	1583					5085	1583	466	3539	
Volume (vph)	763	175	530	0	0	0	0	1526	212	350	1289	0
Peak-hour factor, PHF	0.92	0.92	0.92	0.92	0.92	0.92	0.92	0.92	0.92	0.92	0.92	0.92
Adj. Flow (vph)	829	190	576	0	0	0	0	1659	230	380	1401	0
RTOR Reduction (vph)	0	0	5	0	0	0	0	0	138	0	0	0
Lane Group Flow (vph)	829	190	571	0	0	0	0	1659	92	380	1401	0
Turn Type	Perm		Perm						Perm	Perm		
Protected Phases		4						2			6	
Permitted Phases	4		4						2	6		
Actuated Green, G (s)	16.0	16.0	16.0					16.0	16.0	16.0	16.0	
Effective Green, g (s)	16.0	16.0	16.0					16.0	16.0	16.0	16.0	
Actuated g/C Ratio	0.40	0.40	0.40					0.40	0.40	0.40	0.40	
Clearance Time (s)	4.0	4.0	4.0					4.0	4.0	4.0	4.0	
Vehicle Extension (s)	3.0	3.0	3.0					3.0	3.0	3.0	3.0	
Lane Grp Cap (vph)	708	745	633					2034	633	186	1416	
v/s Ratio Prot		0.10						0.33			0.40	
v/s Ratio Perm	0.47		0.36						0.15	c0.82		
v/c Ratio	1.17	0.26	0.90					0.82	0.15	2.04	0.99	
Uniform Delay, d1	12.0	8.0	11.3					10.7	7.6	12.0	11.9	
Progression Factor	1.00	1.00	1.00					1.00	1.00	0.66	0.65	
Incremental Delay, d2	91.5	0.2	16.0					3.7	0.5	485.3	20.0	
Delay (s)	103.5	8.2	27.3					14.4	8.1	493.3	27.7	
Level of Service	F	A	C					B	A	F	C	
Approach Delay (s)		64.7			0.0			13.7			127.0	
Approach LOS		E			A			B			F	

Intersection Summary			
HCM Average Control Delay	67.5	HCM Level of Service	E
HCM Volume to Capacity ratio	1.60		
Actuated Cycle Length (s)	40.0	Sum of lost time (s)	8.0
Intersection Capacity Utilization	101.1%	ICU Level of Service	G
Analysis Period (min)	15		
c Critical Lane Group			

Movement	EBL	EBT	EBR	WBL	WBT	WBR	NBL	NBT	NBR	SBL	SBT	SBR
Lane Configurations												
Sign Control		Stop			Stop			Free			Free	
Grade		0%			0%			0%			0%	
Volume (veh/h)	93	29	123	3	0	33	0	980	26	75	891	0
Peak Hour Factor	0.92	0.92	0.92	0.92	0.92	0.92	0.92	0.92	0.92	0.92	0.92	0.92
Hourly flow rate (vph)	101	32	134	3	0	36	0	1065	28	82	968	0
Pedestrians												
Lane Width (ft)												
Walking Speed (ft/s)												
Percent Blockage												
Right turn flare (veh)												
Median type		None			None							
Median storage veh)												
Upstream signal (ft)												
pX, platoon unblocked												
vC, conflicting volume	1700	2225	484	1876	2211	547	968			1093		
vC1, stage 1 conf vol												
vC2, stage 2 conf vol												
vCu, unblocked vol	1700	2225	484	1876	2211	547	968			1093		
tC, single (s)	7.5	6.5	6.9	7.5	6.5	6.9	4.1			4.1		
tC, 2 stage (s)												
tF (s)	3.5	4.0	3.3	3.5	4.0	3.3	2.2			2.2		
p0 queue free %	0	15	75	62	100	93	100			87		
cM capacity (veh/h)	50	37	529	9	38	481	707			634		

Direction, Lane #	EB 1	EB 2	WB 1	NB 1	NB 2	SB 1	SB 2
Volume Total	101	165	39	710	383	404	646
Volume Left	101	0	3	0	0	82	0
Volume Right	0	134	36	0	28	0	0
cSH	50	150	86	1700	1700	634	1700
Volume to Capacity	2.03	1.10	0.45	0.42	0.23	0.13	0.38
Queue Length (ft)	254	222	47	0	0	11	0
Control Delay (s)	656.1	163.3	77.8	0.0	0.0	3.8	0.0
Lane LOS	F	F	F			A	
Approach Delay (s)	350.4		77.8	0.0		1.5	
Approach LOS	F		F				

Intersection Summary			
Average Delay	40.0		
Intersection Capacity Utilization	76.5%	ICU Level of Service	D
Analysis Period (min)	15		

Movement	EBL	EBT	WBT	WBR	SBL	SBR
Lane Configurations						
Sign Control		Free	Free		Stop	
Grade		0%	0%		0%	
Volume (veh/h)	0	1667	899	418	0	226
Peak Hour Factor	0.92	0.92	0.92	0.92	0.92	0.92
Hourly flow rate (vph)	0	1812	977	454	0	246
Pedestrians						
Lane Width (ft)						
Walking Speed (ft/s)						
Percent Blockage						
Right turn flare (veh)						
Median type					None	
Median storage veh)						
Upstream signal (ft)						
pX, platoon unblocked						
vC, conflicting volume	1432				2110	716
vC1, stage 1 conf vol						
vC2, stage 2 conf vol						
vCu, unblocked vol	1432				2110	716
tC, single (s)	4.1				6.8	6.9
tC, 2 stage (s)						
tF (s)	2.2				3.5	3.3
p0 queue free %	100				100	34
cM capacity (veh/h)	471				44	373

Direction, Lane #	EB 1	EB 2	WB 1	WB 2	SB 1
Volume Total	906	906	651	780	246
Volume Left	0	0	0	0	0
Volume Right	0	0	0	454	246
cSH	1700	1700	1700	1700	373
Volume to Capacity	0.53	0.53	0.38	0.46	0.66
Queue Length (ft)	0	0	0	0	113
Control Delay (s)	0.0	0.0	0.0	0.0	31.5
Lane LOS					D
Approach Delay (s)	0.0		0.0		31.5
Approach LOS					D

Intersection Summary			
Average Delay	2.2		
Intersection Capacity Utilization	58.9%	ICU Level of Service	B
Analysis Period (min)	15		

Movement	EBL	EBT	EBR	WBL	WBT	WBR	NBL	NBT	NBR	SBL	SBT	SBR
Lane Configurations												
Ideal Flow (vphpl)	1900	1900	1900	1900	1900	1900	1900	1900	1900	1900	1900	1900
Total Lost time (s)				4.0	4.0		4.0	4.0			4.0	4.0
Lane Util. Factor				0.97	1.00		1.00	0.95			0.91	1.00
Frt				1.00	0.90		1.00	1.00			1.00	0.85
Flt Protected				0.95	1.00		0.95	1.00			1.00	1.00
Satd. Flow (prot)				3433	1678		1770	3539			5085	1583
Flt Permitted				0.95	1.00		0.25	1.00			1.00	1.00
Satd. Flow (perm)				3433	1678		466	3539			5085	1583
Volume (vph)	0	0	0	541	246	478	318	1242	0	0	1503	593
Peak-hour factor, PHF	0.92	0.92	0.92	0.92	0.92	0.92	0.92	0.92	0.92	0.92	0.92	0.92
Adj. Flow (vph)	0	0	0	588	267	520	346	1350	0	0	1634	645
RTOR Reduction (vph)	0	0	0	0	7	0	0	0	0	0	0	277
Lane Group Flow (vph)	0	0	0	588	780	0	346	1350	0	0	1634	368
Turn Type				Perm			Perm					Perm
Protected Phases					8			2			6	
Permitted Phases				8			2					6
Actuated Green, G (s)				16.0	16.0		16.0	16.0			16.0	16.0
Effective Green, g (s)				16.0	16.0		16.0	16.0			16.0	16.0
Actuated g/C Ratio				0.40	0.40		0.40	0.40			0.40	0.40
Clearance Time (s)				4.0	4.0		4.0	4.0			4.0	4.0
Vehicle Extension (s)				3.0	3.0		3.0	3.0			3.0	3.0
Lane Grp Cap (vph)				1373	671		186	1416			2034	633
v/s Ratio Prot					c0.47			0.38			0.32	
v/s Ratio Perm				0.17			c0.74					0.41
v/c Ratio				0.43	1.16		1.86	0.95			0.80	0.58
Uniform Delay, d1				8.7	12.0		12.0	11.6			10.6	9.4
Progression Factor				1.00	1.00		0.83	0.82			1.00	1.00
Incremental Delay, d2				0.2	89.1		403.2	12.9			3.5	3.9
Delay (s)				8.9	101.1		413.1	22.4			14.1	13.2
Level of Service				A	F		F	C			B	B
Approach Delay (s)		0.0			61.7			102.1			13.8	
Approach LOS		A			E			F			B	

Intersection Summary			
HCM Average Control Delay	54.1	HCM Level of Service	D
HCM Volume to Capacity ratio	1.51		
Actuated Cycle Length (s)	40.0	Sum of lost time (s)	8.0
Intersection Capacity Utilization	106.6%	ICU Level of Service	G
Analysis Period (min)	15		
c Critical Lane Group			

Movement	EBL	EBT	EBR	WBL	WBT	WBR	NBL	NBT	NBR	SBL	SBT	SBR
Lane Configurations												
Ideal Flow (vphpl)	1900	1900	1900	1900	1900	1900	1900	1900	1900	1900	1900	1900
Total Lost time (s)	4.0	4.0	4.0					4.0	4.0	4.0	4.0	
Lane Util. Factor	1.00	1.00	1.00					0.91	1.00	1.00	0.95	
Frt	1.00	1.00	0.85					1.00	0.85	1.00	1.00	
Flt Protected	0.95	1.00	1.00					1.00	1.00	0.95	1.00	
Satd. Flow (prot)	1770	1863	1583					5085	1583	1770	3539	
Flt Permitted	0.95	1.00	1.00					1.00	1.00	0.24	1.00	
Satd. Flow (perm)	1770	1863	1583					5085	1583	444	3539	
Volume (vph)	530	114	454	0	0	0	0	994	360	497	1530	0
Peak-hour factor, PHF	0.92	0.92	0.92	0.92	0.92	0.92	0.92	0.92	0.92	0.92	0.92	0.92
Adj. Flow (vph)	576	124	493	0	0	0	0	1080	391	540	1663	0
RTOR Reduction (vph)	0	0	2	0	0	0	0	0	227	0	0	0
Lane Group Flow (vph)	576	124	491	0	0	0	0	1080	164	540	1663	0
Turn Type	Perm		Perm						Perm	Perm		
Protected Phases		4						2			6	
Permitted Phases	4		4						2	6		
Actuated Green, G (s)	15.2	15.2	15.2					16.8	16.8	16.8	16.8	
Effective Green, g (s)	15.2	15.2	15.2					16.8	16.8	16.8	16.8	
Actuated g/C Ratio	0.38	0.38	0.38					0.42	0.42	0.42	0.42	
Clearance Time (s)	4.0	4.0	4.0					4.0	4.0	4.0	4.0	
Vehicle Extension (s)	3.0	3.0	3.0					3.0	3.0	3.0	3.0	
Lane Grp Cap (vph)	673	708	602					2136	665	186	1486	
v/s Ratio Prot		0.07						0.21			0.47	
v/s Ratio Perm	0.33		0.31						0.25	c1.22		
v/c Ratio	0.86	0.18	0.82					0.51	0.25	2.90	1.12	
Uniform Delay, d1	11.4	8.2	11.1					8.5	7.5	11.6	11.6	
Progression Factor	1.00	1.00	1.00					1.00	1.00	0.63	0.61	
Incremental Delay, d2	10.4	0.1	8.4					0.9	0.9	866.6	60.6	
Delay (s)	21.8	8.4	19.5					9.4	8.4	873.9	67.6	
Level of Service	C	A	B					A	A	F	E	
Approach Delay (s)		19.5			0.0			9.1			265.3	
Approach LOS		B			A			A			F	

Intersection Summary			
HCM Average Control Delay	127.6	HCM Level of Service	F
HCM Volume to Capacity ratio	1.93		
Actuated Cycle Length (s)	40.0	Sum of lost time (s)	8.0
Intersection Capacity Utilization	106.6%	ICU Level of Service	G
Analysis Period (min)	15		
c Critical Lane Group			

Movement	EBL	EBT	EBR	WBL	WBT	WBR	NBL	NBT	NBR	SBL	SBT	SBR
Lane Configurations												
Sign Control		Stop			Stop			Free			Free	
Grade		0%			0%			0%			0%	
Volume (veh/h)	56	15	61	7	0	55	0	728	16	67	1112	0
Peak Hour Factor	0.92	0.92	0.92	0.92	0.92	0.92	0.92	0.92	0.92	0.92	0.92	0.92
Hourly flow rate (vph)	61	16	66	8	0	60	0	791	17	73	1209	0
Pedestrians												
Lane Width (ft)												
Walking Speed (ft/s)												
Percent Blockage												
Right turn flare (veh)												
Median type		None			None							
Median storage veh)												
Upstream signal (ft)												
pX, platoon unblocked												
vC, conflicting volume	1810	2163	604	1624	2154	404	1209			809		
vC1, stage 1 conf vol												
vC2, stage 2 conf vol												
vCu, unblocked vol	1810	2163	604	1624	2154	404	1209			809		
tC, single (s)	7.5	6.5	6.9	7.5	6.5	6.9	4.1			4.1		
tC, 2 stage (s)												
tF (s)	3.5	4.0	3.3	3.5	4.0	3.3	2.2			2.2		
p0 queue free %	0	62	85	80	100	90	100			91		
cM capacity (veh/h)	41	42	441	38	43	596	573			813		

Direction, Lane #	EB 1	EB 2	WB 1	NB 1	NB 2	SB 1	SB 2
Volume Total	61	83	67	528	281	476	806
Volume Left	61	0	8	0	0	73	0
Volume Right	0	66	60	0	17	0	0
cSH	41	155	224	1700	1700	813	1700
Volume to Capacity	1.47	0.53	0.30	0.31	0.17	0.09	0.47
Queue Length (ft)	154	66	30	0	0	7	0
Control Delay (s)	462.1	52.2	27.9	0.0	0.0	2.5	0.0
Lane LOS	F	F	D			A	
Approach Delay (s)	226.1		27.9	0.0		0.9	
Approach LOS	F		D				

Intersection Summary			
Average Delay	15.4		
Intersection Capacity Utilization	73.4%	ICU Level of Service	D
Analysis Period (min)	15		

Movement	EBL	EBT	WBT	WBR	SBL	SBR
Lane Configurations						
Sign Control		Free	Free		Stop	
Grade		0%	0%		0%	
Volume (veh/h)	0	1257	1009	475	0	341
Peak Hour Factor	0.92	0.92	0.92	0.92	0.92	0.92
Hourly flow rate (vph)	0	1366	1097	516	0	371
Pedestrians						
Lane Width (ft)						
Walking Speed (ft/s)						
Percent Blockage						
Right turn flare (veh)						
Median type					None	
Median storage veh)						
Upstream signal (ft)						
pX, platoon unblocked						
vC, conflicting volume	1613				2038	807
vC1, stage 1 conf vol						
vC2, stage 2 conf vol						
vCu, unblocked vol	1613				2038	807
tC, single (s)	4.1				6.8	6.9
tC, 2 stage (s)						
tF (s)	2.2				3.5	3.3
p0 queue free %	100				100	0
cM capacity (veh/h)	400				49	325

Direction, Lane #	EB 1	EB 2	WB 1	WB 2	SB 1
Volume Total	683	683	731	882	371
Volume Left	0	0	0	0	0
Volume Right	0	0	0	516	371
cSH	1700	1700	1700	1700	325
Volume to Capacity	0.40	0.40	0.43	0.52	1.14
Queue Length (ft)	0	0	0	0	375
Control Delay (s)	0.0	0.0	0.0	0.0	129.8
Lane LOS					F
Approach Delay (s)	0.0		0.0		129.8
Approach LOS					F

Intersection Summary			
Average Delay	14.4		
Intersection Capacity Utilization	70.9%	ICU Level of Service	C
Analysis Period (min)	15		

Movement	EBL	EBT	EBR	WBL	WBT	WBR	NBL	NBT	NBR	SBL	SBT	SBR
Lane Configurations												
Ideal Flow (vphpl)	1900	1900	1900	1900	1900	1900	1900	1900	1900	1900	1900	1900
Total Lost time (s)				4.0	4.0		4.0	4.0			4.0	4.0
Lane Util. Factor				0.97	1.00		1.00	0.95			0.91	1.00
Frt				1.00	0.89		1.00	1.00			1.00	0.85
Flt Protected				0.95	1.00		0.95	1.00			1.00	1.00
Satd. Flow (prot)				3433	1657		1770	3539			5085	1583
Flt Permitted				0.95	1.00		0.25	1.00			1.00	1.00
Satd. Flow (perm)				3433	1657		466	3539			5085	1583
Volume (vph)	0	0	0	349	179	499	494	2023	0	0	1314	519
Peak-hour factor, PHF	0.92	0.92	0.92	0.92	0.92	0.92	0.92	0.92	0.92	0.92	0.92	0.92
Adj. Flow (vph)	0	0	0	379	195	542	537	2199	0	0	1428	564
RTOR Reduction (vph)	0	0	0	0	0	0	0	0	0	0	0	338
Lane Group Flow (vph)	0	0	0	379	737	0	537	2199	0	0	1428	226
Turn Type				Perm			Perm					Perm
Protected Phases					8			2			6	
Permitted Phases				8			2					6
Actuated Green, G (s)				16.0	16.0		16.0	16.0			16.0	16.0
Effective Green, g (s)				16.0	16.0		16.0	16.0			16.0	16.0
Actuated g/C Ratio				0.40	0.40		0.40	0.40			0.40	0.40
Clearance Time (s)				4.0	4.0		4.0	4.0			4.0	4.0
Vehicle Extension (s)				3.0	3.0		3.0	3.0			3.0	3.0
Lane Grp Cap (vph)				1373	663		186	1416			2034	633
v/s Ratio Prot					c0.44			0.62			0.28	
v/s Ratio Perm				0.11			c1.15					0.36
v/c Ratio				0.28	1.11		2.89	1.55			0.70	0.36
Uniform Delay, d1				8.1	12.0		12.0	12.0			10.0	8.4
Progression Factor				1.00	1.00		0.74	0.74			1.00	1.00
Incremental Delay, d2				0.1	69.7		850.5	249.2			2.1	1.6
Delay (s)				8.2	81.7		859.5	258.1			12.1	10.0
Level of Service				A	F		F	F			B	A
Approach Delay (s)		0.0			56.7			376.1			11.5	
Approach LOS		A			E			F			B	

Intersection Summary			
HCM Average Control Delay	190.8	HCM Level of Service	F
HCM Volume to Capacity ratio	2.00		
Actuated Cycle Length (s)	40.0	Sum of lost time (s)	8.0
Intersection Capacity Utilization	119.2%	ICU Level of Service	H
Analysis Period (min)	15		
c Critical Lane Group			

Movement	EBL	EBT	EBR	WBL	WBT	WBR	NBL	NBT	NBR	SBL	SBT	SBR
Lane Configurations												
Ideal Flow (vphpl)	1900	1900	1900	1900	1900	1900	1900	1900	1900	1900	1900	1900
Total Lost time (s)	4.0	4.0	4.0					4.0	4.0	4.0	4.0	
Lane Util. Factor	1.00	1.00	1.00					0.91	1.00	1.00	0.95	
Frt	1.00	1.00	0.85					1.00	0.85	1.00	1.00	
Flt Protected	0.95	1.00	1.00					1.00	1.00	0.95	1.00	
Satd. Flow (prot)	1770	1863	1583					5085	1583	1770	3539	
Flt Permitted	0.95	1.00	1.00					1.00	1.00	0.25	1.00	
Satd. Flow (perm)	1770	1863	1583					5085	1583	466	3539	
Volume (vph)	977	175	530	0	0	0	0	1581	212	442	1324	0
Peak-hour factor, PHF	0.92	0.92	0.92	0.92	0.92	0.92	0.92	0.92	0.92	0.92	0.92	0.92
Adj. Flow (vph)	1062	190	576	0	0	0	0	1718	230	480	1439	0
RTOR Reduction (vph)	0	0	5	0	0	0	0	0	138	0	0	0
Lane Group Flow (vph)	1062	190	571	0	0	0	0	1718	92	480	1439	0
Turn Type	Perm		Perm						Perm	Perm		
Protected Phases		4						2			6	
Permitted Phases	4		4						2	6		
Actuated Green, G (s)	16.0	16.0	16.0					16.0	16.0	16.0	16.0	
Effective Green, g (s)	16.0	16.0	16.0					16.0	16.0	16.0	16.0	
Actuated g/C Ratio	0.40	0.40	0.40					0.40	0.40	0.40	0.40	
Clearance Time (s)	4.0	4.0	4.0					4.0	4.0	4.0	4.0	
Vehicle Extension (s)	3.0	3.0	3.0					3.0	3.0	3.0	3.0	
Lane Grp Cap (vph)	708	745	633					2034	633	186	1416	
v/s Ratio Prot		0.10						0.34			0.41	
v/s Ratio Perm	0.60		0.36						0.15	c1.03		
v/c Ratio	1.50	0.26	0.90					0.84	0.15	2.58	1.02	
Uniform Delay, d1	12.0	8.0	11.3					10.9	7.6	12.0	12.0	
Progression Factor	1.00	1.00	1.00					1.00	1.00	0.61	0.58	
Incremental Delay, d2	232.4	0.2	16.1					4.5	0.5	724.1	25.8	
Delay (s)	244.4	8.2	27.4					15.4	8.1	731.4	32.8	
Level of Service	F	A	C					B	A	F	C	
Approach Delay (s)		151.5			0.0			14.5			207.6	
Approach LOS		F			A			B			F	

Intersection Summary			
HCM Average Control Delay	123.5	HCM Level of Service	F
HCM Volume to Capacity ratio	2.04		
Actuated Cycle Length (s)	40.0	Sum of lost time (s)	8.0
Intersection Capacity Utilization	119.2%	ICU Level of Service	H
Analysis Period (min)	15		
c Critical Lane Group			

Movement	EBL	EBT	EBR	WBL	WBT	WBR	NBL	NBT	NBR	SBL	SBT	SBR
Lane Configurations												
Sign Control		Stop			Stop			Free			Free	
Grade		0%			0%			0%			0%	
Volume (veh/h)	117	29	123	3	0	33	0	1001	26	75	912	0
Peak Hour Factor	0.92	0.92	0.92	0.92	0.92	0.92	0.92	0.92	0.92	0.92	0.92	0.92
Hourly flow rate (vph)	127	32	134	3	0	36	0	1088	28	82	991	0
Pedestrians												
Lane Width (ft)												
Walking Speed (ft/s)												
Percent Blockage												
Right turn flare (veh)												
Median type		None			None							
Median storage veh)												
Upstream signal (ft)												
pX, platoon unblocked												
vC, conflicting volume	1734	2271	496	1910	2257	558	991			1116		
vC1, stage 1 conf vol												
vC2, stage 2 conf vol												
vCu, unblocked vol	1734	2271	496	1910	2257	558	991			1116		
tC, single (s)	7.5	6.5	6.9	7.5	6.5	6.9	4.1			4.1		
tC, 2 stage (s)												
tF (s)	3.5	4.0	3.3	3.5	4.0	3.3	2.2			2.2		
p0 queue free %	0	9	74	45	100	92	100			87		
cM capacity (veh/h)	47	35	520	6	35	473	693			621		

Direction, Lane #	EB 1	EB 2	WB 1	NB 1	NB 2	SB 1	SB 2
Volume Total	127	165	39	725	391	412	661
Volume Left	127	0	3	0	0	82	0
Volume Right	0	134	36	0	28	0	0
cSH	47	142	62	1700	1700	621	1700
Volume to Capacity	2.72	1.17	0.63	0.43	0.23	0.13	0.39
Queue Length (ft)	339	237	66	0	0	11	0
Control Delay (s)	964.4	189.7	131.3	0.0	0.0	3.8	0.0
Lane LOS	F	F	F			A	
Approach Delay (s)	526.7		131.3	0.0		1.5	
Approach LOS	F		F				

Intersection Summary			
Average Delay	63.8		
Intersection Capacity Utilization	79.0%	ICU Level of Service	D
Analysis Period (min)	15		

Movement	EBL	EBT	WBT	WBR	SBL	SBR
Lane Configurations						
Sign Control		Free	Free		Stop	
Grade		0%	0%		0%	
Volume (veh/h)	0	1768	963	418	0	364
Peak Hour Factor	0.92	0.92	0.92	0.92	0.92	0.92
Hourly flow rate (vph)	0	1922	1047	454	0	396
Pedestrians						
Lane Width (ft)						
Walking Speed (ft/s)						
Percent Blockage						
Right turn flare (veh)						
Median type					None	
Median storage veh)						
Upstream signal (ft)						
pX, platoon unblocked						
vC, conflicting volume	1501				2235	751
vC1, stage 1 conf vol						
vC2, stage 2 conf vol						
vCu, unblocked vol	1501				2235	751
tC, single (s)	4.1				6.8	6.9
tC, 2 stage (s)						
tF (s)	2.2				3.5	3.3
p0 queue free %	100				100	0
cM capacity (veh/h)	442				36	354

Direction, Lane #	EB 1	EB 2	WB 1	WB 2	SB 1
Volume Total	961	961	698	803	396
Volume Left	0	0	0	0	0
Volume Right	0	0	0	454	396
cSH	1700	1700	1700	1700	354
Volume to Capacity	0.57	0.57	0.41	0.47	1.12
Queue Length (ft)	0	0	0	0	377
Control Delay (s)	0.0	0.0	0.0	0.0	118.4
Lane LOS					F
Approach Delay (s)	0.0		0.0		118.4
Approach LOS					F

Intersection Summary			
Average Delay	12.3		
Intersection Capacity Utilization	69.2%	ICU Level of Service	C
Analysis Period (min)	15		