3.12 Public Services and Recreation

This section of the EIR analyzes the potential impacts on the existing public services and recreation that could result from implementation of the proposed Specific Plan. For the purposes of this EIR, public services refers to fire protection, police protection, parks and recreation, schools, and libraries.

Fire Protection

A. Setting

The City of El Monte maintains a contractual agreement with the Los Angeles County Fire Department (LACoFD) to provide fire protection and emergency vehicle services for the City. There are four fire stations located in the City of El Monte, which are part of Division IX, Battalion 10 of LACoFD. The four fire stations within the City limits include:

1. Fire Station 166, 3615 Santa Anita Avenue, El Monte
2. Fire Station 167, 11567 Bryant Road, El Monte
3. Fire Station 168, 3207 Cogswell Road, El Monte
4. Fire Station 169, 5112 North Peck Road, El Monte

Fire Station No. 166 is the nearest fire station to the Plan Area and is located adjacent to the western boundaries of the Plan Area in the vicinity of the intersection of Valley Mall and Santa Anita Avenue. This fire station responds to emergency calls from within the Plan Area. Currently, Fire Station No. 166 has four fire personnel on duty per shift or 12 personnel during a full day (three shifts). The fire equipment at Fire Station No. 166 includes one Quint, two engines, and one utility vehicle. **Table 3.12-1** lists the fire stations and available equipment and **Figure 3.12-1** illustrates the location the fire stations within the City.

Table 3.12-1: City of El Monte LACoFD Fire Stations

Location	Service and Equipment	Distance from the Plan Area
Fire Station No. 166 3615 Santa Anita Avenue, El Monte	1-Quint 2-Engines 1-Utility	Immediately adjacent to Plan Area on the west
Fire Station No. 167 11567 Bryant Road, El Monte	1-Engine 1-Squad	0.7 miles NE of Plan Area
Fire Station No. 168 3207 Cogswell Road, El Monte	1-Engine	1.0 mile SE of Plan Area
Fire Station No. 169 5112 North Peck Road, El Monte	1-Engine	2.0 miles NE of Plan Area

Source: http://www.fire.lacounty.gov/fire-station-listings/
http://www.firedepartment.net/directory/california/los-angeles-county/los-angeles/los-angeles-county-fire-department/fire-equipment

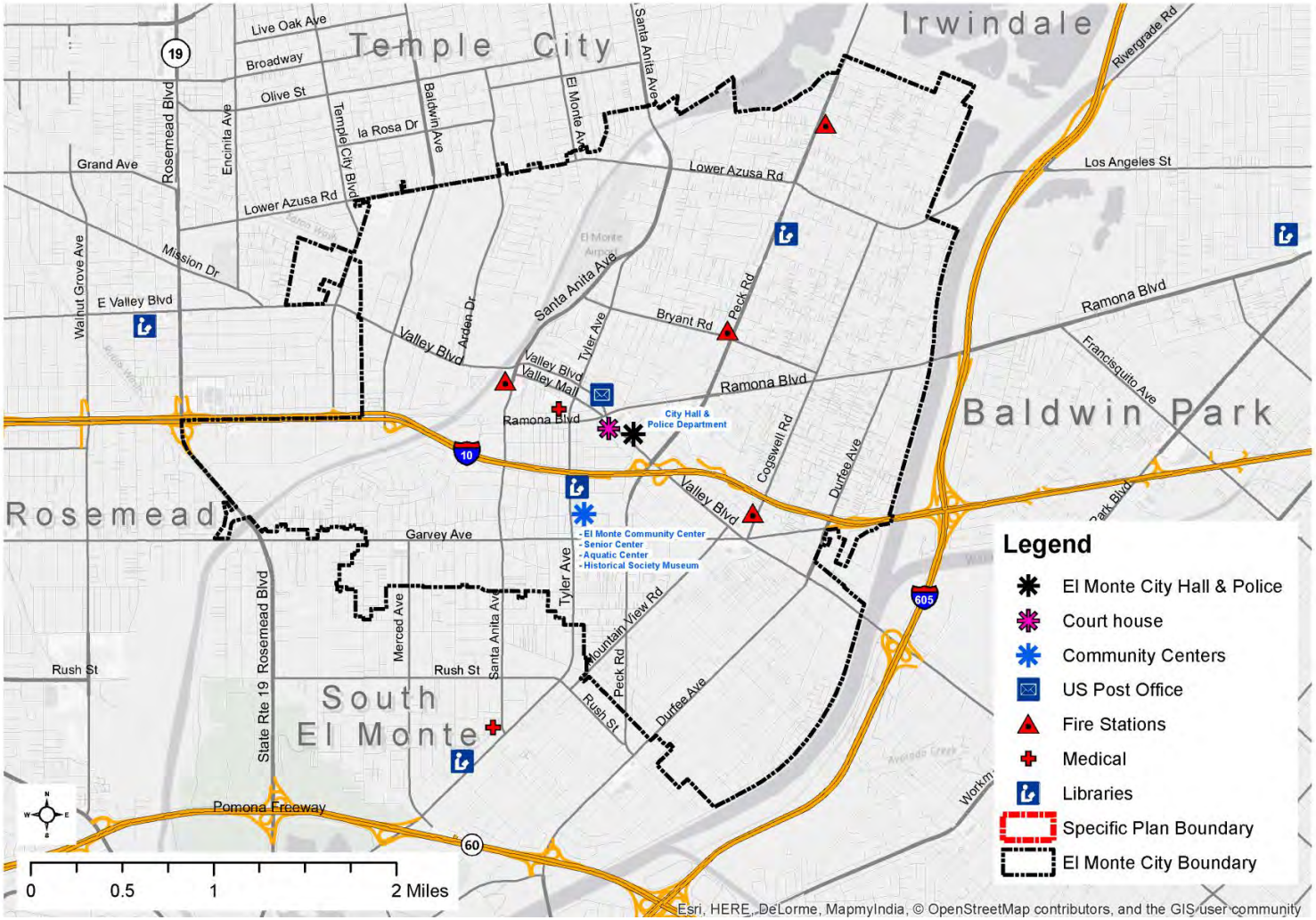

Downtown Main Street Transit-Oriented Development Specific Plan Draft EIR	**Figure 3.12-1 El Monte Public Facilities**

The adequacy of fire protection service is measured through response times, which refers to the time it takes from receipt of a call to arrival at an emergency site. The LACoFD uses national guidelines of a five-minute response time for the first-arriving unit for fire and emergency medical responses. Hence, response times for any location in the City are under five minutes, and for advanced life support (paramedic) services, the response time standard is eight minutes. The LACoFD indicates that the average response time from Fire Station No. 166 to any part of the Plan Area is less than five minutes[1]. In the event of a large-scale emergency in the City of El Monte, fire service from other stations within Battalion 10 would respond from the Cities of Rosemead, Temple City, and South El Monte.

B. Regulatory Framework

Federal

National Fire Protection Association. Code 1710, Standard for the Organization and Deployment of Fire Suppression Operations, Emergency Medical Operations, and Special Operations to the Public by Career Fire Departments.

State

California Building Code. The California Building Code (CBC) (Part 2, Title 24 of the California Code of Regulations) sets forth minimum standards for building design as it relates to fire safety, structural safety, and access compliance.[2]Though particular regulations can vary by jurisdiction, standard fire safety requirements include installation of fire sprinklers and use of fire resistant building materials and fire doors.

California Fire Code. The California Fire Code (CFC) (Part 9, Title 24 of the California Code of Regulations) provides regulations consistent with national standards for protection against hazards resulting from fire and explosion, safety hazards in buildings and on premises, handling of hazardous materials, as well as some language on provisions for emergency response personne.l[3] It is updated every three years by the California Building Standards Commission.

Local

Los Angeles County Fire Code. The 2014 Edition of the Los Angeles County Fire Code incorporates the new 2013 Edition of the California Fire Code. To protect residents and property, any new development project within the City is required to comply with applicable fire and life safety standards and code requirements established by the LACoFD. These safety standards and requirements include fire hydrant flow, hydrants spacing, and adequate fire lane turning radius, access and design, and water supply connections, which must be adequately sized to the satisfaction of LACoFD. The City regularly adopts all updates to the County Fire Code.

---

[1] *Phone conversation with Captain Jimenez of Fire Station No. 166, November 21, 2016.*
[2] *http://www.dgs.ca.gov/dsa/Programs/progCodes/title24.aspx#part2*
[3] *http://www.dgs.ca.gov/dsa/Programs/progCodes/title24.aspx#part9*

General Plan. Section IV in the Safety Element of the City's General Plan contains the following goals and policies as it relates to fire protection and emergency medical services.

Housing Element

H-1.3 Community Amenities. Require adequate provision of public services and facilities, infrastructure, open space, adequate parking and traffic management, pedestrian and bicycle routes, and public safety to create highly desirable neighborhoods.

H-2.3 Neighborhood Amenities. Require new residential projects to be adequately served by parks and recreation services, libraries, sanitary sewers and storm drains, transportation, public safety, and other public services and facilities.

Parks and Recreation Element

PSF-2.1 Service Quality. Establish and maintain response times for fires and emergency response services that are consistent with professional industry standards set forth by the National Fire Protection Association.

PSF-2.2 Resources. Provide adequate staff, fire stations, training facilities, up-to-date equipment and technology, and City infrastructure to support and achieve established industry standards set forth by the National Fire Protection Association.

PSF-2.3 Hazardous Waste. Protect residents and the business community from hazardous wastes through education, monitoring, and enforcement of proper use, storage, handling, and disposal of hazardous waste.

PSF-2.4 Community Education. Continue to expand and improve community outreach and education programs, including bilingual and trilingual outreach, for disaster preparedness, emergency situations, and safety hazards.

PSF-2.5 Program Expansion. Develop and expand local chapters for each of the Los Angeles County Fire Department's established organizations within El Monte, including the Community Emergency Response Team.

PSF-2.6 Program Evaluation. Periodically monitor, evaluate, and modify the Citywide disaster management plan to remain prepared in the event of a large-scale natural disaster or emergency situation in El Monte.

PSF-2.7 Funding. Seek to increase funding for fire and police services, where necessary, outside of general fund revenues through special assessments, fees, taxes, and other means to allow for permanent revenue sources.

Public Health and Safety Element

PHS-1.5 Critical Facilities. Ensure that police and fire stations, emergency operations centers, communications centers, reservoirs, medical facilities, and other essential structures and facilities remain safe and in a state of readiness for seismic events.

PHS-1.7 Emergency Response. Periodically conduct simulated emergency response drills to hazards, concentrating on interagency coordination needed to ensure that services will be available to the community with minimal delay and overlap of services.

PHS-7.1 Mutual Aid. Continue to participate in mutual and automatic aid agreements for the provision of fire, law enforcement, medical response, public works, mass care, and other assistance.

PHS-7.2 Essential Facilities. Ensure, to the fullest extent feasible, that essential structures, facilities, and lifeline services remain safe, structurally sound, and fully functional.

PHS-7.3 Multi-jurisdictional Efforts. Coordinate disaster preparedness and recovery with local, state, and federal governmental agencies to ensure cooperative police and fire assistance from other governmental entities during emergencies.

PHS-7.4 Citizen Training. Prepare residents and business to effectively respond to emergencies by conducting public outreach and educational efforts such as CERT (Community Emergency Response Team) and other efforts.

PHS-7.6 Emergency Response Team. Continue to maintain and update the City's emergency response organization, consisting of representatives from all City departments, local quasigovernmental agencies, private businesses, citizens, and other community partners involved in critical or community services.

C. Significance Threshold

Implementation of the proposed Specific Plan would have a significant impact related to fire services if it would result in substantial adverse physical impacts associated with the provision of new or physically altered governmental facilities, need for new or physically altered governmental facilities, the construction of which could cause significant environmental impacts, in order to maintain acceptable services ratios, response times or other performance objectives.

D. Impacts and Mitigation Measures

Impact PS-1

Impact PS-1 Implementation of the proposed Specific Plan would add residential and commercial uses, generating additional need for fire protection services and facilities, including additional staff and equipment. However, implementation of the General Plan policies and public service requirements in the Specific Plan would reduce potential impacts on fire protection and emergency services to less than significant levels.

As described in Chapter 2, Project Description, implementation of the proposed Specific Plan is expected to result in a net increase of 2,200 residential dwelling units and 500,000 square feet of commercial uses through buildout in the year 2035. New residential and commercial development resulting from the implementation of the Specific Plan is expected to increase fire and emergency incidents.

While the current response time from Fire Station No. 166 to any location within the Plan Area is below the target response time of less than five minutes per national guidelines, calls for fire protection service from the Plan Area will increase in number and frequency by the year 2035. As mentioned, Fire Station No. 166, located at 3615 Santa Anita Avenue, is staffed with four fire personnel per shift and includes one quint, two engines, and one utility vehicle. The Captain of Fire Station No. 166 indicates that the projected increase in housing units and commercial uses under the Specific Plan would require an increase of two to three additional personnel per shift and additional fire equipment4. The need for additional staff and equipment, which will also increase operational costs, and may necessitate the expansion of the existing fire station.

The potential costs associated with the potential expansion of staffing and facilities would be funded and offset through the increased tax revenue generated from the development allowed under the proposed Specific Plan. Individual development projects in the Plan Area would be reviewed by the City and LACoFD and would be required to comply with the standards in effect at the time building permits are issued. Los Angeles County is responsible for planning new fire station locations and expanding existing stations to accommodate demand as needed. The City's contract with the LACoFD would ensure that adequate facilities are available to accommodate the growth envisioned under the Specific Plan. Specific sites for future fire protection facilities have not been identified. Therefore, an evaluation of the environmental impacts of implementation of the facilities is not feasible at this time. At the time the LACoFD decides to expand existing facilities, or construct new facilities, a complete evaluation of potential environmental impacts would be conducted under CEQA. Given the level of urban development existing

[4] *Phone conversation with Captain Jimenez of Fire Station No. 166, November 21, 2016.*

within the City of El Monte and within the Plan Area, it is likely that potential new future facilities would be built where the current fire stations exist or would be developed on infill sites within the City.

Although the LACoFD does not impose development impact fees to help fund the increased demand for fire protection services, it does however, review development projects for compliance with applicable fire and life safety standards and code requirements established by the County. These safety standards and requirements include fire hydrant flows and spacing, adequate fire lane turning radii, adequate access and design, and adequately sized water supply connections. These requirements help minimize potential fire impacts associated with implementation of the Specific Plan.

In addition, as a condition of approval, all large developments within the City shall address the impacts of the development on police and fire protection services. The City may initiate a study for additional new public safety services or public safety service facilities for the benefit of supporting future multi-family developments within the City. The information from sources such as the study, but not limited to the study, may be used by the City to initiate proceedings to form a community facilities district (CFD) to provide a source of funding to pay for any such additional level of public safety services or new public safety service facilities for the benefit of the project. Furthermore, the City fire protection and prevention policies contained in the General Plan, ordinances in the Municipal Code, and requirements identified in the Specific Plan, will ensure the continued maintenance of a high level of fire protection services. Therefore, potential fire impacts would be less than significant.

Mitigation Measures

No mitigation is required.

Significance After Mitigation

No mitigation measures are required and impacts on fire protection remain less than significant.

E. Cumulative Impacts

Implementation of the Specific Plan combined with the cumulative projects will increase the need for additional staff and equipment at the four fire stations located within the City. The City's contract with the LACoFD would ensure that adequate facilities are available to accommodate the growth envisioned under the Specific Plan and the cumulative projects list.

Police Protection

A. Setting

The City of El Monte Police Department provides police protection services in the City. The main police station is located at 11333 Valley Boulevard and includes a temporary jail facility. This station is located adjacent to City Hall and is less than one-quarter mile east of the Plan Area. Previous **Figure 3.12-1** illustrates the location of the police station as well as other public facilities. The second station, primarily a community relations office, is located at 10503 Valley Boulevard, which is approximately one-tenth of a mile west of the Plan Area. The Police Department also commands an air-support unit office at the San Gabriel Valley Airport, where two helicopters can be dispatched to assist police operations in the City. The cities of Montebello, Irwindale, and Baldwin Park contract with the City of El Monte to receive air support for police operations.

The Police Department enforces all local, state, and federal laws, performs investigations and makes arrests, administers emergency medical treatment, and responds to City emergencies. The Police Department is dedicated to a philosophy of community policing and has established various public safety programs.

The El Monte Police Department has a staff of 127 police officers, 46 civilian staff, and four K-9 units. The City employs about 1.1 police officers per 1,000 residents.[5] Police Department staff is supplemented by volunteers who are enlisted through the Volunteers Caring and Patrolling Program (VCAP). VCAPs are uniformed and badged, non-sworn officers who assume police duties that do not require a sworn officer, allowing officers to perform essential police duties. The Police Department Patrol Division is made up of four Lieutenants, seven Sergeants, nine Lead Agents and 51 Police Officers that work a 12½-hour shift per day handling a variety of radio calls including emergency in progress radio calls to quality of life issues. The Detective Bureau investigates some of the most serious part I crimes in the FBI's list of crimes, which include robberies, arsons, burglaries and grand theft auto. This Division is staffed with 10 detectives, a sergeant and a lieutenant. The Special Investigations Team is the primary undercover and surveillance unit within the El Monte Police Department. The team consists of one supervisor and five detectives. In addition, the Police Department also employs 12 full-time dispatchers, four shift supervisors, as well as a Communications Manager. The Communications Center is staffed 24 hours a day, seven days a week, to respond to requests from citizens, and field personnel. Other units within the Police Department include air support, canine unit, court officers, mounted patrol, parking enforcement, SWAT, and the Traffic Safety Bureau.[6]

El Monte is divided into four Service Areas, each with a commander to address the specific needs of the communities within their area by utilizing the resources available to them. The Service Area Commander

[5] *City of El Monte General Plan EIR, 2011.*
[6] *http://www.elmonte.org/Government/Police/AdministrativeServices.aspx*

establishes a single point of contact for the residents to voice their concerns including crime, traffic, transients, graffiti, complex conditions, and events that damage community health and safety. Service Area Policing provides residents with direct contact, professional accountability, and streamlined solutions to the problems they face. Service Area Policing requires collaboration with other departments within the City of El Monte. Departments such as, Public Works, Parks and Recreation, the City Manager's Office, and City Council will collaborate with the Police Department and the community to address the concerns of businesses and community members. The Plan Area is located in Service Area 1, which includes the area north of the Rio Hondo River and the I-10 Freeway and west of Peck Road.

B. Regulatory Framework

There are no federal or state regulations pertaining to police protection that apply to the proposed Specific Plan.

Local

General Plan

Land Use Element

LU-1.5 Police Safety Review. Require, through the conditional use permit, police department review of uses that may be associated with high levels of noise, nighttime patronage, criminal activity, loitering, or other activities to prevent adverse impacts.

Housing Element

H-1.3 Community Amenities. Require adequate provision of public services and facilities, infrastructure, open space, adequate parking and traffic management, pedestrian and bicycle routes, and public safety to create highly desirable neighborhoods.

H-2.3 Neighborhood Amenities. Require new residential projects to be adequately served by parks and recreation services, libraries, sanitary sewers and storm drains, transportation, public safety, and other public services and facilities.

Parks and Recreation Element

PR-1.6 Safety. Enhance the safety of parks through incorporation of the latest in playground design, crime prevention technology, and police and community-based patrols.

Public Services and Facilities Element

PSF-1.1 Resources. Supply the EMPD with adequate staff, state-of-the art equipment, new technology, and resources necessary to provide acceptable response times and support for police services.

PSF-1.3 Community Involvement. Continue partnerships with residents, community organizations, and schools to encourage neighborhood and community-oriented crime-prevention programs.

PSF-1.5 Traffic Safety. Continue, evaluate, and improve the City's traffic safety program, focusing on traffic law enforcement, accident prevention, and safety for motorists, bicyclists, and pedestrians.

PSF-1.6 Neighborhood Programs. Continue to support, promote, and improve the City's neighborhood improvement, citizen volunteer, and crime-prevention programs.

PSF-1.7 Emerald Necklace. Improve the safety of Emerald Necklace visitors and residents along the rivers through the coordination of police patrol activities with the Emerald Necklace Safety and Security Task Force.

PSF-1.8 Funding. Seek to raise additional funds for police services outside of general fund revenues through special assessments, fees, taxes, and other means to allow for permanent revenue sources.

Public Health and Safety Element

PHS-1.5 Critical Facilities. Ensure that police and fire stations, emergency operations centers, communications centers, reservoirs, medical facilities, and other essential structures and facilities remain safe and in a state of readiness for seismic events.

PHS-1.7 Emergency Response. Periodically conduct simulated emergency response drills to hazards, concentrating on interagency coordination needed to ensure that services will be available to the community with minimal delay and overlap of services.

PHS-7.1 Mutual Aid. Continue to participate in mutual and automatic aid agreements for the provision of fire, law enforcement, medical response, public works, mass care, and other assistance.

PHS-7.3 Multi-jurisdictional Efforts. Coordinate disaster preparedness and recovery with local, state, and federal governmental agencies to ensure cooperative police and fire assistance from other governmental entities during emergencies.

PHS-7.6 Emergency Response Team. Continue to maintain and update the City's emergency response organization, consisting of representatives from all City departments, local quasigovernmental agencies, private businesses, citizens, and other community partners involved in critical or community services.

C. Significance Threshold

Implementation of the proposed Specific Plan would have a significant impact related to police protection if it would result in the need for new or physically altered police department facilities in order to maintain performance objectives, the construction of which would cause significant environmental impacts.

D. Impacts and Mitigation Measures

Impact PS-2

Impact PS-2	Implementation of the proposed Specific Plan would increase the number of new residential units, resident population, commercial uses, and jobs in the Plan Area, which would result in the need for additional police protection services. Expansion of the current El Monte Police Department station or construction of a new facility would occur in existing urbanized areas where environmental impacts would be minimal. Therefore, impacts to police protection services and related facilities would be less than significant.

Full implementation of the Specific Plan would add up to 2,200 residential units and 500,000 square feet of commercial uses at buildout in the year 2035. As discussed in the Project Description, the increase in units could result in a net increase of 8,465 residents. Based on current staffing levels necessary to serve the residents of El Monte, the Police Department's police station may need additional officers to maintain adequate coverage for increased population resulting from buildout of the Specific Plan. Based on a current ratio of 1.1 officers to 1,000 residents, there is the potential need for nine additional officers resulting from buildout of the Specific Plan.

If the El Monte Police Department determines that additional facilities are needed to provide police protection services to the Plan Area and the remainder of the city, potential demand for additional personnel, equipment, and operational costs generated by the proposed Specific Plan would be funded and offset through the increased tax revenue generated from the specific development projects allowed under the Specific Plan. Specific sites for future police protection facilities have not been identified. Therefore, an evaluation of the environmental impacts of implementation of the facilities is not feasible at this time. However, the City of El Monte is almost entirely developed and urbanized and it is likely that future law enforcement facilities would be developed on infill sites or would replace existing facilities with minimal environmental impacts. Nonetheless, when the El Monte Police Department determines that expanded or new facilities are needed, a complete evaluation of potential environmental impacts would be conducted pursuant to CEQA.

In addition, as a condition of approval, all large developments within the City shall address the impacts of the development on police and fire protection services. The City may initiate a study for additional new public safety services or public safety service facilities for the benefit of supporting future multi-family developments within the City. The information from sources such as the study, but not limited to the study, may be used by the City to initiate proceedings to form a community facilities district (CFD) to provide a source of funding to pay for any such additional level of public safety services or new public safety service facilities for the benefit of the project. Furthermore, the City fire protection and prevention policies contained in the General Plan, ordinances in the Municipal Code, and requirements identified in the

Specific Plan, will ensure the continued maintenance of a high level of fire protection services. Therefore, potential fire impacts would be less than significant.

Mitigation Measures

No mitigation is required.

Significance After Mitigation

No mitigation measures are required and impacts on fire protection remain less than significant.

E. Cumulative Impacts

Development in the Plan Area and other neighborhoods in El Monte and surrounding communities would occur incrementally over time to gradually increase the City's overall population and demand for public services. The El Monte General Plan (2011) contains policies addressing the City's need to continually provide adequate police protections services. In addition, any expansion of police facilities would occur on infill sites and in urbanized areas where environmental impacts would be minimal. Therefore, cumulative impacts to police protection services and related facilities would be less than significant.

Parks and Recreation

A. Setting

There are 11 parks operated by the City of El Monte Parks, Recreation and Community Services Department that total 51.25 acres of park space within the City. The largest is Pioneer Park covering 11.2 acres. At this time, Pioneer Park, which formerly included ball fields, is under construction. None of the parks are located within the Specific Plan boundaries, but a few are in close proximity including Arceo Park on Tyler Avenue which includes summer programming.

The Parks, Recreation and Community Services Department also maintains the El Monte Community Center at 3130 North Tyler Avenue across from Arceo Park. This facility serves the entire City and contains a large meeting auditorium (Grace T. Black Auditorium), the El Monte Historical Society, the Jack Crippen Senior Center, recreational rooms, administrative offices, and outdoor courtyards. The City has an Aquatic Center across from the Community Center providing year-around swimming recreation in an indoor pool. The City has a sports program offering basketball, baseball and golf activities. There are also a number of recreational classes available to residents all year round. **Table 3.12-2** lists the City parks and facilities that most serve the Plan Area. **Figure 3.12-2** maps the City parks and recreational facilities. Additional parks and facilities in the City include, Gibson Mariposa Park at 4.3 acres, Mountain View Park at 10.1 acres, Rio Vista Park at 1.5 acres, and Zamora Park at 5.2 acres. These parks are primarily neighborhood serving parks. Table 3.12-2: Parks and Recreational Facilities Near the Plan Area.

Table 3.12-2 Parks and Facilities

Name	Location	Acreage	Amenities
Arceo Memorial Park	3125 North Tyler Avenue El Monte, 91731	3.4	Walking trails, play equipment, rental facility, one picnic area, a band shell, lawn areas
Fletcher Park	3404 Fletcher Parkway El Monte, 91731	2.9	Basketball courts, walking trails, play equipment, rental facility, one picnic area
Pioneer Park	3535 Santa Anita Avenue El Monte, 91731	11.2	Under construction
Santa Fe Trail Historical Park	3675 Santa Anita Avenue El Monte, 91731	0.5	State of California Historical Landmark no. 975
Baldwin Mini Park	3750 Baldwin Avenue El Monte, 91731	0.5	Basketball courts, rental facility, play area
Lambert Park	11431 McGirk Street El Monte, 91732	9.3	Sports clubs, programming, basketball courts, baseball field, community building, walking trials, play equipment, rental facility, picnic area
Lashbrook Park	3141 Lashbrook Avenue El Monte, 91732 (south Bank of Rio Hondo)	1.8	Picnic tables, walking trail, native plants

Source: City of El Monte

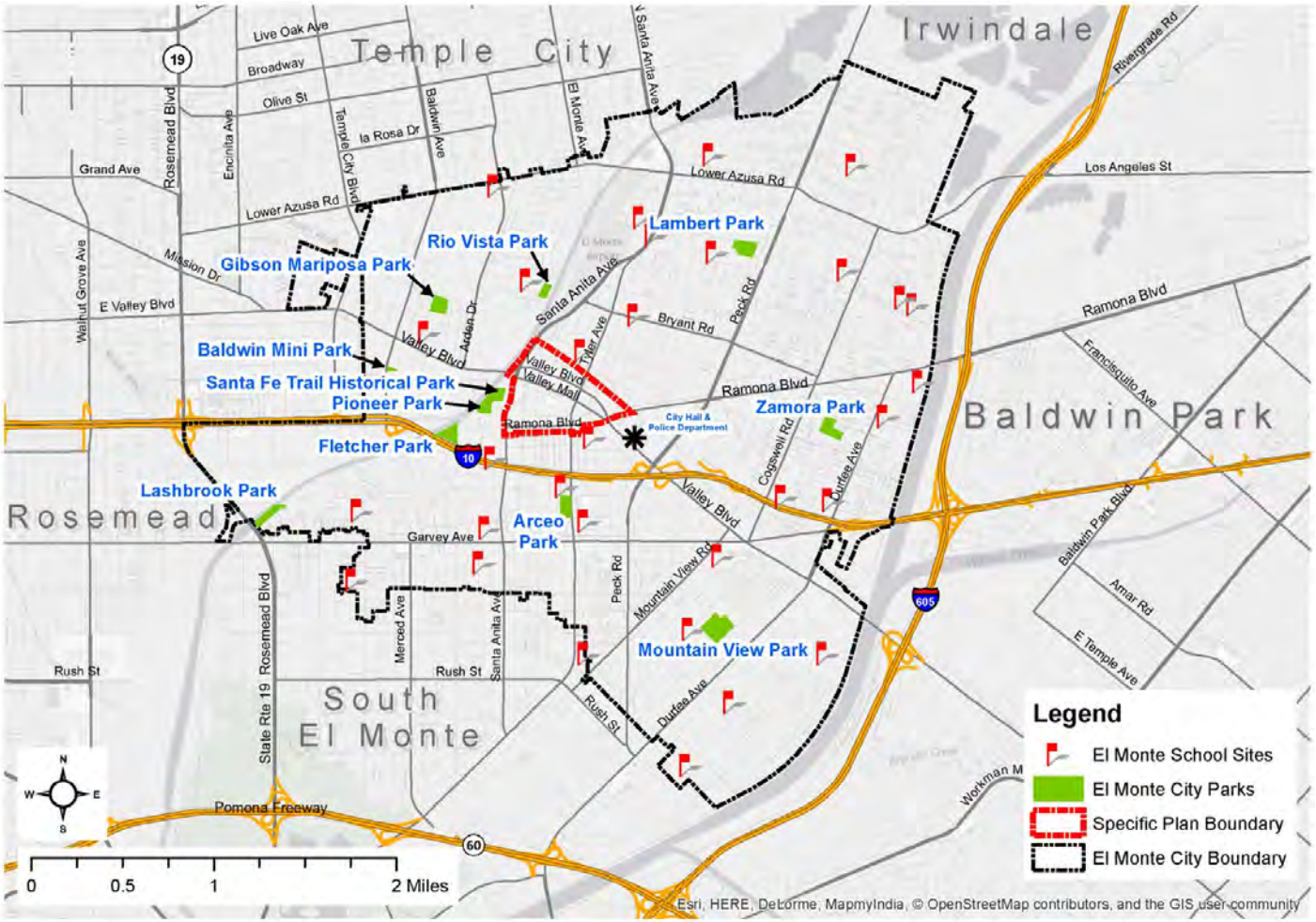

Downtown Main Street Transit-Oriented Development
Specific Plan Draft EIR

Figure 3.12-2 El Monte Parks and Schools

In addition to City parks described above, the Plan Area is adjacent to the regional "Emerald Necklace," which is a vision for a series of parklands in the region along the Rio Hondo and San Gabriel Rivers framing the City of El Monte and helping to enrich the natural environment along the 17-mile loop connecting several cities along these rivers. The project includes partnerships with other community and non-profit organizations and is a sizeable undertaking that has four general segments, as cited in the City's General Plan. Each multiuse trail segment connects to one or more community, neighborhood, or miniparks, and each segment has multiple community access points or gateways as described in the following.

- **Southwest**. This segment connects El Monte to the 750-acre floodplain, habitat, and recreation area to the south known as Whittier Narrows. This area offers the potential for visitors to enjoy the only remaining stretches of natural river surrounded by acres of habitat.
- **Northwest**. This segment connects Fletcher and Pioneer Parks to the downtown and 200-acre proposed Peck Water Park, which will offer opportunities for multiuse trails, outdoor education, and unique recreation opportunities.
- **Northeast**. This segment connects Peck Park and the Rio Hondo River to the San Gabriel River along Arcadia. The San Gabriel River has a "soft bottom" in this portion and will feature an equestrian and Class 1 bike trail along the west bank.
- **Southeast**. This segment connects El Monte to multiple larger-scale recreation areas just outside the city border, including the proposed Woodland's Duck Farm, bike trail, and neighborhood parks lining San Jose Creek, and the Whittier Narrows Recreation Area."

There are also large regional parks that serve the El Monte population including the Santa Fe Dam Recreational Area in the City of Irwindale and the Whittier Narrows Recreation Area adjacent to the City of South El Monte.

B. Regulatory Framework

Federal

There are no federal regulations pertaining to parks that apply to the proposed Specific Plan.

State

Quimby Act. The State Quimby Act was first established by the California legislature in 1965 (California Government Code §66477) authorizing cities and counties to pass local ordinances requiring developers to pay fees, set aside land for parks, or donate conservation easements as a condition of development. Revenue generated through Quimby cannot be used for operation or maintenance of park facilities but can be used to purchase and develop land or recreational facilities. The Quimby Act contains minimum open space/park acreage standards varying from 3 to 5 acres per 1,000 residents. The City of El Monte has not passed a local ordinance authorizing use of the Quimby Act and instead uses other state-enabled impact mitigation fees. The City Recreation and Community Services Department does, however, use

Quimby standard for park acreage to number of residents as a goal for allotment of park space in the City (1 acre per 1,000 residents).

California Mitigation Fee Act (AB 1600). The California Mitigation Fee Act (AB 1600) was adopted in 1989 empowering cities and counties to implement development impact fees for new development projects to help offset the impacts on public services from new development. Revenue from fees can be used for infrastructure like roads, storm drainage, police and fire facilities, or parks. Development impact fees cannot be used for ongoing maintenance, staffing, or for improvements to correct deficiencies in the existing system. Cities and counties must be able to demonstrate a reasonable connection or nexus between the new development and the intended use for the fees.

Local

El Monte General Plan. The City's 2011 General Plan sets forth goals for parks and recreation include: provide ample parks, foster a healthy lifestyle, restore the natural environment, beautify El Monte, and connect the community. To facilitate a beautified environment to live in and promotes public health, the City has implemented a plan that increases the amount of parks, enhances recreation activities, uses green energy sources, and provides street planning that is safe for pedestrians and cyclists. As including in the General Plan, the efforts reflect the City of El Monte's consistent desire to accomplish the following objectives with respect to parks, recreation, and open space:

- Significantly increase the quantity and quality of parks and recreational facilities and programs, tailored to the needs of the community, within easy access to residents to improve their health. Enhance recreational opportunities for all ages through new programs and facilities, improving public transportation, expanding joint-use ventures wherever feasible, and augmenting services.
- Create a walkable and bikeable city with a network of sidewalks, greenways, and paths that allow children to travel safely to school, families to stroll or bike through neighborhoods, and seniors to walk.
- Implement the Emerald Necklace vision of an interconnected network of parks, multiuse trails, and open space along the Rio Hondo and San Gabriel Rivers and tributaries that connect to regional resources.
- Green El Monte through greenways, miniparks, a community forest, and other green infrastructure that will clean the air and water, improve health, and beautify the city.
- Promote energy and natural resources conservation through the implementation of sustainable and green infrastructure designs and principles throughout the community."

Highlighted in the Parks and Recreation Element, the City of El Monte will address the following components in creating a green environment:

- **Greenways**. Develop green parkways and medians that line major corridors, offer potential for walking and bicycling, and link residences to parks, schools, and other community destinations.
- **Community Forest**. Create a lush community forest along public rights of-way, within neighborhoods, and elsewhere to filter air pollutants, provide shade, and beautify the city.
- **Parks**. Create a network of community and neighborhood parks throughout each neighborhood to beautify neighborhoods and offer opportunities for recreation.

- **Community Garden**. Plant community gardens, where feasible, that offer opportunities to plant vegetables, fruits, and flowers and foster neighborhood interaction.
- **Linear Parks**. Create the Emerald Necklace of linear parks, open space, water resources, and recreational resources along the banks of the Rio Hondo and San Gabriel Rivers.

El Monte Municipal Code,16.34.030 - Parkland dedication. Pursuant to Section 66477 of the California Government Code (hereinafter, the "Quimby Act"), the subdivider shall be required to dedicate land, pay fees in lieu thereof, or pay and dedicate a combination of both, for park and/or recreational purposes, including open space purposes. The standards for land dedication or in-lieu fees are established in City Council Ordinance No. 2663 copies of which can be obtained from the City Clerk as a public record.

C. Significance Threshold

Implementation of the proposed Specific Plan would have a significant impact related to park and recreation facilities if it would result in the need for new or physically altered parks and/or recreation facilities, the construction of which would cause significant environmental impacts.

According to Appendix G of the CEQA Guidelines, a project would normally have a significant effect on the environment if the project:

- Would increase the use of existing neighborhood and regional parks or other recreational facilities such that substantial physical deterioration of the facility would occur or be accelerated.
- Includes recreational facilities or requires the construction or expansion of recreational facilities which might have an adverse physical effect on the environment.

D. Impacts and Mitigation Measures

Impact PS-3

Impact PS-3	Implementation of the Specific Plan would add residential units and an estimated 8,465 residents to the Plan Area, increasing use of recreational facilities, contributing to the need for on-going maintenance and upgrades, placing a demand on recreational programming and facilities, and contributing to the City's parkland deficit. Impacts are considered significant, but would be less than significant with mitigation.

As described above and in Chapter 2, Project Description, buildout of the proposed Specific Plan is expected to result in a net increase of 2,054 households which is expected to increase demand for park and recreation facilities in the City. While the City is empowered to impose impact mitigation fees for new subdivision development, these fees may not be put to use for existing facilities or ongoing maintenance. Residential development resulting from the buildout of the Specific Plan will increase the population of City residents. In addition, non-residential uses (i.e. commercial retail, restaurants, and offices) will increase significantly.

The General Plan has recognized that the City overall is underserved by parks and recreational opportunities. There is a deficiency in parkland using the standard of one acre of park land to every 1,000 residents. The City has 51 acres of parkland or 0.41 acre per 1,000 residents. According to the El Monte General Plan, this is well below the San Gabriel regional average of 3.0 acres per 1,000 residents. Contributing to the deficiency numbers is the large and dense population in El Monte and development of parklands has not kept up with population growth since the City incorporated.

Currently, through analysis and programming, the City recognizes that it has a park deficiency problem Citywide. At this rate the City would need to provide 115 acres of parkland but currently only has 51 acres resulting in a deficiency of 64 acres. The projected addition of 8,465 new residents would translate to a need of at least 8 acres of new parkland.

Programs and initiative to improve meeting park standards is included in the General Plan. The City has a subdivision fee program to help pay for park improvements under its Municipal Code Section 16.34.030, but such revenues are not expected to address the current and future deficiency.

The City has a 10-year goal to provide 2 acres of parkland for every 1,000 residents, or 200 new park acres. The City's action plan for parks includes creating new miniparks and neighborhood parks, developing the Emerald Necklace, working with the school districts on joint parks, pursue development of land for large parks, better link residents to programs and facilities.

The City's Municipal Code Section 16.34.030 – Parkland Dedication allows for dedicated park funding through subdivision fees. However, the current subdivision fee under the El Monte Municipal Code falls short of what Quimby would otherwise provide specifically for parkland. Therefore,the City seeks additional park funds through a combination of its General Fund money, Housing and Urban Development (HUD) funding, State and foundation grants. As such, the City can continue to leverage these funding sources to ensure adequate investment in new park and recreation construction, as well as ongoing maintenance of existing park resources (through non-impact mitigation fee funding sources).

Because the City already lacks adequate supply of park space (per the City's Parks, Recreation and Community Services Departments goal of 1 acre of park space per 1,000 residents), demand on existing City and regional parks is expected to increase and result in a furthering of the deficiency. This impact would be considered potentially significant.

Mitigation Measures

The City shall adopt an ordinance authorizing use of the Quimby Act to require all developers (beyond what is required under Municipal Code Section 16.34.030 – Parkland Dedication) to pay fees, set aside land for parks, or donate conservation easements as a condition of development.

Significance After Mitigation

Implementation of the mitigation measure would reduce adverse impacts to less than significant levels.

E. Cumulative Impacts

Development in the Plan Area and other neighborhoods in El Monte and surrounding communities would occur incrementally over time to gradually increase the City's overall population and demand for public services, including parks and recreational services. The cumulative impacts would be significant; however, implementation of the identified mitigation measure would reduce the impact to a less than significant level.

Schools

A. Environmental Setting

The El Monte community is served by three public school districts, 35 public schools and 10 private schools. The Plan Area is served by the El Monte City School District and the El Monte Union High School District. This EIR will focus on analysis of these two districts. The other school district within City boundaries is the Mountain View School District.

There are no K-12 schools located within Specific Plan boundaries but the Rosemead-El Monte Adult School has classrooms and administrative offices in the Plan Area at 10807 Ramona Boulevard. The El Monte City School District administrative offices are also located with the Plan Area at 3540 North Lexington Avenue. Both the El Monte-Rosemead Adult Education Center and Rio Hondo College serve the adult populations in and around the Plan Area.

Based on demographic projections and reports prepared by the California Department of Education, for the 2000 to 2014 period, the K-12 public school enrollment in El Monte has been declining steadily from 24,559 students in 2000 to 19,807 students in 2014. Similarly, K-6 and 7-9 grades have also experienced declining enrollment. Increasing enrollment in grades 10-12 was seen in the 2000 to 2014 period increasing from 4,646 students in 2000 to 4,799 students in 2014. These enrollment figures are reflective of the overall population growth in the City which has declined slightly from 2000 to 2014. Overall population decline is primarily due to declines in the age 5-20 group. The City has experienced population increases in the age 55-65 plus groups.

El Monte City School District

The El Monte City School District is the primary school district serving the City and particularly the Plan Area. The District service area covers a large area from Irwindale on the north to South El Monte on the south. The Plan Area is entirely within the central portion of the district's boundary.

The District was founded in the 1880s and currently enrolls students in its 14 schools serving either the K-6 grades or the K-8 schools as listed below in Table 3.12-3 District services also include parenting programs, family counseling, student wellness, parent training, child care and education at 4 Head Start preschools.

A recent report prepared by the El Monte City School District and contained in the 2013 Facilities Master Plan provided an analysis of district enrollment projections and school capacity figures. The existing capacity of all 14 schools listed above is 12,912 students. Based on enrolment history and future projections to 2016, the district has experienced a decline of 1,202 students from 9,911 students in the 2009-2010 school years to 8,703 students in the 2015-2016 school years. The projections showed declining enrollment among all schools and an excess of school seats. The analysis showed that incoming

students from outside of the district could be accommodated within the existing school facilities. The district has recently closed one of its elementary schools, the Mulhall Elementary School on Mulhall Street, off Santa Anita Avenue, north of the Plan Area.

Table 3.12-3 Schools in the El Monte City School District

Name	Address
Cherry Lee Elementary School (K-6)	5025 Buffington Road, El Monte, CA 91731
Cleminson Elementary School (K-6)	5213 N. Daleview Ave., Temple City, CA 91780
Columbia Elementary School (K-8)	3400 North California Avenue, El Monte, CA 91731
Cortada Elementary School (K-6)	3111 N. Potrero Ave., El Monte, CA 91733
Durfee Elementary School (K-8)	12233 Star Ave., El Monte, CA 91732
Gidley Elementary School (K-8)	10226 E. Lower Azusa, El Monte, CA 91731
Le Gore Elementary School (K-6)	11121 Bryant Road, El Monte, CA 9173
New Lexington Elementary School (K-6)	10410 Bodger, El Monte, CA 91733
Potrero Elementary School (K-8)	2611 N. Potrero, El Monte, CA 91733
Rio Hondo Elementary School (K-8)	11425 Wildflower Road, Arcadia, CA 91006
Rio Vista Elementary School (K-6)	4300 N. Esto, El Monte, CA 91731
Shirpser Elementary School (K-5)	4020 N. Gibson, El Monte, CA 91731
Wilkerson Elementary School (K-6)	2700 N. Doreen Ave., El Monte, CA 91733
Wright Elementary School (K-8)	11317 E. McGirk St., El Monte, CA 91732

El Monte Union High School District

The El Monte Union High School District was established in 1901 and serves the communities of El Monte, Rosemead, and South El Monte. The District operates six high schools, a community day school, and a continuation school. **Table 3.12-4** lists the schools in the El Monte Union High School District and previous **Figure 3.12-4** shows the location of the schools within the City. The nearest high school to the Plan Area is the El Monte High School on Tyler Avenue to the south. The following eight facilities are included in the District. The District also operates the Rosemead-El Monte Adult Centers. The District's projected enrollment for schools within El Monte today is over 9,000 high school students.

Table 3.12-4 Schools in the El Monte Union High School District

Name	Address
Arroyo High School	4921 Cedar Ave., El Monte, CA 91732
Community Day School	5050 Kings Row, El Monte, CA 91732
El Monte High School	3048 Tyler Ave, El Monte, CA 91731
Fernando R. Ledesma Continuation School	12347 Ramona Blvd., El Monte, CA 91732
Granada Transition Center	3513 Granada Ave., El Monte, CA 91731
Mountain View High School	2900 Parkway Dr., El Monte, CA 91732
Rosemead High School	9063 E. Mission Dr., Rosemead, CA 91770
South El Monte High School	1001 N. Durfee Ave., South El Monte, CA 91733

B. Regulatory Framework

Federal

There are no federal regulations relating to schools that apply to the proposed Specific Plan.

State

State law empowers school districts in the state to charge fees on new residential, commercial, and industrial development if those developments are expected to generate additional students for the district, thereby causing a need for additional school facilities.

Government Code Section 65995: Authorizes school districts to collect developer fees at a maximum of $3.36 per square foot for residential construction and $0.54 for commercial/industrial construction (Level I fees). Level I fees are adjusted every two years according to the inflation rate as determined by the State Allocation Board.

Government Code Section 66001: Requires school districts demonstrate a reasonable relationship between the amount and use of developer fees and the development for which the fees are to be levied.

California State Assembly Bill 1600, Mitigation Fee Act (Section 66000 et seq. of the California Government Code): Enacted in 1989 as AB 1600, the Mitigation Fee Act allows local agencies to establish, increase, or impose a fee on developers for proposed development projects to help defray all or a portion of the cost for public facilities directly tied to that development. Any local agency wishing to impose a development impact fee as a condition of development must first be able to identify the direct application to which the fee will be used. The agency must be able to demonstrate a reasonable relationship ("nexus") between the fee and its intended purpose based on the development project in question.

Local

Under California Government Code Section 65995 (above), the El Monte City School District and the El Monte Unified High School District imposes Level I fees on new residential and commercial/industrial development. Fee levels requested by the District must be substantiated in a School Facilities Fee Justification Report.

C. Significance Threshold

Implementation of the proposed Specific Plan would have a significant impact related to schools if it would result in the need for new or physically altered school facilities, the construction of which would cause significant environmental impacts.

D. Impacts and Mitigation Measures

Impact PS-4

Impact PS-4	Implementation of the Specific Plan would add up to 2,054 new households within the Plan Area and a projected additional 1,467 K-12 students to current student roles. However, with payment of State-mandated school impact fees, impacts related to public school operating capacity would be less than significant.

Buildout of the Specific Plan will bring new residential development to the City within the Plan Area and would therefore increase demand on the City's existing schools through new student population. As reviewed in the Project Description, the net residential development potential of the total Specific Plan is projected to be increase by 2,054 households. Using the ratio of 2014 K-12 El Monte enrollments to total El Monte population, the Plan Area's net new households would result in an additional 1,467 students. Yet as demographics are showing that K-9 enrollment is declining in El Monte while the high school population is increasing slightly, an additional 1,467 students is likely an overestimation. This is further substantiated by the projection that while new housing units expected via implementation of the Specific Plan are projected to provide for a number of family households, they are also expected to include smaller units for non-family households.

Because both Districts have facilities and offices in the Plan Area, redevelopment of underutilized parcels surrounding their offices is expected to occur but would not have an impact on their existing operations.

Both districts are expected to be able to address the need to accommodate growth. The Districts annually monitor enrollment projections and facility needs. The growth in the Plan Area is expected to be in a number of phases, therefore allowing the Districts to systematically provide any additional needed facilities. Given that whatever growth does occur will be addressed through imposition of school facility mitigation fees enabled by state law, this impact is considered less than significant.

Mitigation Measures

No mitigation is required.

Significance After Mitigation

The impacts of the proposed Plan would be less than significant and no mitigation measures are required; therefore the impact on schools would remain less than significant.

E. Cumulative Impacts

Development in the Plan Area and other neighborhoods in El Monte and surrounding communities would occur incrementally over time to gradually increase the City's overall population and demand for public services. The need for additional public services, including schools, would be provided through the payment of impact fees for schools. Therefore, the Specific Plan's contribution to cumulative impacts associated with public schools would not be cumulatively considerable and would be less than significant.

Libraries

A. Setting

The City of El Monte has two public libraries, the El Monte Library and the Norwood Library. Both libraries are operated by the Los Angeles County Public Library system. Both libraries offer adult and teen programs, summer reading programs for children, facilities for events, and many publications in English and other languages. Additionally, the South El Monte Library on Central Avenue in South El Monte is within two miles of the Plan Area. All three libraries as listed below are prepared to provide services to the additional households projected with implementation of the Specific Plan, which will be discussed in section D.

A more detailed overview of each library is provided below.

El Monte Library. The El Monte Library is located at 3224 Tyler Avenue, approximately one mile south of the Plan Area. The library is a 12,000-square foot facility with more than 100,000 volumes.

Norwood Library. The Norwood Library is located at 3550 North Peck Road in El Monte approximately 2 miles north of the Plan Area. The library features a 10,000 square-foot facility that houses more than 90,000 volumes.

South El Monte. The South El Monte library is located at 1430 North Central Avenue within the civic center area of South El Monte and is approximately two miles south of the Plan Area.

Additional County public libraries nearby are the Rosemead County Library on Valley Boulevard to the west of the Plan Area and the Baldwin Park County Library to the east. The two libraries located within the City are mapped in previous **Figure 3.12-2**.

B. Regulatory Framework

There is no federal, state, or local regulations related to libraries that apply to the proposed Specific Plan.

C. Significance Threshold

Implementation of the proposed Specific Plan would have a significant impact related to library services if it would result in the need for new or physically altered library facilities, the construction of which would cause significant environmental impacts.

D. Impacts and Mitigation Measures

Impact PS-5

Impact PS-5	Implementation of the Specific Plan would increase the service population of the El Monte Public Libraries. However, because adequate capacity at existing libraries within the City and in adjacent communities exists to serve the proposed Specific Plan, impacts related to libraries would be less than significant.

It is expected that the increase in population resulting from the Specific Plan could increase use of available libraries. The Los Angeles County Board of Supervisors oversees implementation of an annual dedicated funding stream for the County's vast library system, divided into seven planning areas.

The County Library's current strategic plan includes discussion of its values and its initiatives to continue to provide and expand current services. With the assumption that the County Library System will continue to manage and monitor the condition of library facilities and availability of library loan items, it is reasonable to expect that the impact of the Specific Plan on library services for the City of El Monte will be less than significant, as the County Library is prepared to expand its services if there is evidence of need.

Furthermore, the libraries within the City are part of a County-wide system established under authority of the County Free Library Act and a special fund department operating under the authority of the County Board of Supervisors managed by a 20-member appointed Library Commission. It is one of the largest library systems in the country with a 7.5 million volume book collection serving over 3.5 million residents throughout 51 of the 88 incorporated cities of the County. Hence, any population growth or decrease associated with the Specific Plan should be adequately served by this existing system.

While there are only two branches serving the City of El Monte, three additional branches can be found in nearby South El Monte, Rosemead and Baldwin Park.

Mitigation Measures

No mitigation is required.

Significance After Mitigation

The impacts of the proposed Specific Plan would be less than significant and no mitigation measures are required, therefore the impact of library services would remain less than significant.

E. Cumulative Impacts

Development in the Plan Area and other neighborhoods in El Monte and surrounding communities would occur incrementally over time to gradually increase the City's overall population and demand for public services. The need for additional public services, including libraries, would be provided through the use of existing library facilities in the City of El Monte and surrounding communities. Therefore, the Specific Plan's contribution to cumulative impacts associated with libraries would not be cumulatively considerable and would be less than significant.

3.13 Transportation/Traffic

This section is based on the Traffic Impact Study (TIS) prepared by Evan Brook Associates in December 2016. The TIS evaluated the potential impacts associated with the implementation of the proposed Specific Plan. The study presents existing 2016 traffic conditions and calculates future 2020 and 2035 peak-hour conditions on seven street intersections and two freeway on/off ramps. Additionally, the TIS incorporated the comments from the California Department of Transportation ("Caltrans") as part of the NOP review of this project. The Caltrans letter dated August 31, 2015 is included in **Appendix A**, and the complete TIS is in **Appendix F** of this EIR.

A. Setting

Regional Access

Freeways are controlled-access, high-speed facilities with grade-separated interchanges. They are intended to carry high volumes of traffic from region to region. The planning, design, construction, and maintenance of freeways in California are the responsibility of the Caltrans.

The City of El Monte is served by two nearby interstate freeways, which effectively provide connections to destinations throughout the Los Angeles metropolitan region and points beyond. The two interstate freeways to El Monte are described below:

Interstate 10. The San Bernardino Freeway (I-10) is an east-west freeway that connects the San Gabriel Valley with Downtown Los Angeles to the west and San Bernardino County to the east. The I-10 bisects the City of El Monte and is accessed at key arterials, including Valley Boulevard, Durfee/Garvey Avenue, Santa Anita Road, and Peck Road.

Interstate 605. The San Gabriel River Freeway (I-605) is a north-south freeway located along the east side of the San Gabriel River, approximately two miles east of the Plan Area. The closest I-605 freeway ramp to the Plan Area is at Ramona Avenue on the borders of the Cities of Baldwin Park and Irwindale.

I-605 frames the City's eastern border. Rosemead Boulevard, a state highway, borders Flair Park on the City's western border. These freeways and state highway provide excellent access to destinations through the Los Angeles metropolitan region.

Local Roadway Network

The local roadway network of streets and highways are most frequented by autos. The principal corridors for auto travel in El Monte are Valley Boulevard and Garvey Avenue in the east–west direction, and Rosemead Boulevard, Baldwin Avenue, Santa Anita Avenue, and Peck Road in the north–south direction.

Major Arterials. These streets carry traffic from one part of the City to another and connect to the highway system. Arterials carry the highest volumes of traffic at the highest speeds, with limited interference to traffic

flow. Major arterials typically function as truck routes and emergency response routes. However, they are not exclusively auto-dominated streets; they may serve as major transit corridors and need to accommodate convenient and safe pedestrian travel.

Secondary Arterials. Secondary arterials carry traffic from one part of the community to another and connect to major arterials. Secondary arterials typically carry lower volumes, principally local traffic, and are used for shorter trips to activity centers, jobs, residences, schools, and other local destinations. Secondary arterials are often used for transit, bicyclists, and pedestrians. Depending on the roadway width, trucks may have limited access to secondary arterials.

Collectors. Collector streets are intermediate routes; they connect residential neighborhoods to each another and neighborhoods to commercial and other districts in El Monte. They collect traffic from local streets in residential neighborhoods and channel it onto arterials. Collector streets may also carry local transit service. Finally, collectors often serve as the primary bicycle routes in the community and also accommodate pedestrian travel. Most collector streets have two lanes.

Local Streets. Local streets serve local land uses, typically residential neighborhoods, and provide direct access to individual parcels. Local streets typically carry the lowest volume of traffic, which is nearly exclusively local traffic. Local streets, being the primary means for residents to get around their neighborhood, should also accommodate bicycles and local pedestrian circulation. Speeds on local streets are relatively low, and on-street parking is often permitted. In some cases, however, local streets serve commercial and industrial uses.

Table 3.13-1 presents a summary of function of City roadways within the Plan Area.

Table 3.13-1: Functions of Key Roadways in the Plan Area

		Function			
Street	Roadway Type	Auto	Truck	Transit	Bicycle
Valley Boulevard	Major Arterial	Principal	Yes	Primary	Bike Route
Ramona Boulevard	Secondary Arterial	--	Yes	Primary	Bike Route
Santa Anita Avenue	Major Arterial	Principal	Yes	Primary	Bike Route
Tyler Avenue	Secondary Arterial	--	No	Primary	Bike Lane

Source: City of El Monte General Plan Circulation Element, 2011

Truck Routes

Truck routes are the primary routes for truck traffic. Truck routes are focused onto principal travel corridors that support commercial and industrial activities. Controlling and limiting trucks help prevent them from intruding into neighborhoods and traveling on streets not designed to accommodate them, reduce diesel and particulate emissions near sensitive land uses, control noise and vibration, and improve quality of life in the community.

Transit Lines

The City of El Monte is home to public transit facilities and services. The El Monte Transit Station is a regional bus hub in downtown with direct access to the El Monte Busway, an elevated and dedicated busway that extends from the El Monte Transit Station to I-10. This transitway is one of the most successful and long-lasting dedicated bus/HOV-lane facilities in the country. The Los Angeles to San Bernardino Metrolink commuter rail line runs east–west through the center of the City with a rail station on the northeast part of the Plan Area.

Rail Lines

A Union Pacific Rail Road (UPRR) main line travels east–west through the City, north of Valley Boulevard. Approximately 35 freight trains pass daily through El Monte. With the improvements to the Alameda Corridor, the number and frequency of railroad freight trains are expected to significantly increase in the future. According to region plans, grade separations will be at six crossings, and mobility improvements are scheduled for the remaining at-grade crossings.

Airport

The San Gabriel Valley Airport (formerly El Monte Airport) is located less than one quarter mile north of the Plan Area on Santa Anita Avenue in the City of El Monte. It is a general aviation airport that is owned and operated by the County of Los Angeles. As a general aviation airport, the airport supports regional and general aviation operations.

Parking

The City El Monte Municipal Code establishes parking requirements and design and access criteria appropriate to each land use category. Parking provided within the City is a combination of on-street parking and surface parking on-site.

Level of Service Criteria

Roadway operations and the relationship between capacity and traffic volumes are generally expressed in terms of levels of service (LOS). Levels of service are defined as LOS A through F. These levels recognize that, while an absolute limit exists as to the amount of traffic traveling through a given intersection (the absolute capacity), the conditions that motorists experience rapidly deteriorate as traffic approaches the absolute capacity. Under such conditions, congestion is experienced and there is generally instability in the traffic flow, which means that relatively small incidents (e.g., momentary engine stall) can cause considerable fluctuations in speeds and delays. This near-capacity situation is labeled LOS E. Beyond LOS E, capacity is exceeded, and arriving traffic will exceed the ability of the intersection to accommodate it. An upstream queue will form and continue to expand in length until the demand volume reduces.

A complete description of the meaning of level of service can be found in the Highway Research Board's Special Report 209: Highway Capacity Manual which establishes the definitions for LOS A through F. Brief descriptions of the six levels of service, as extracted from the manual, are listed in **Table 3.13-2**.

LOS D is the minimum threshold at all key intersections in the urbanized areas. The traffic study guidelines require that traffic mitigation measures be identified to provide for operations at the minimum threshold levels.

For the Plan Area intersections, the Intersection Capacity Utilization (ICU) procedure has been utilized to determine intersection levels of service. Levels of service are presented for the entire intersection, consistent with the local and regional agency policies.

Table 3.13-2: Level of Service Definition

LOS	Description
A	No approach phase is fully utilized by traffic and no vehicle waits longer than one red indication. Typically, the approach appears quite open, turns are made easily and nearly all drivers find freedom of operation.
B	This service level represents stable operation, where an occasional approach phase is fully utilized and a substantial number are approaching full use. Many drivers begin to feel restricted within platoons of vehicles.
C	This level still represents stable operating conditions. Occasionally, drivers have to wait through more than one red signal indication, and backups may develop behind turning vehicles. Most drivers feel somewhat restricted.
D	This level encompasses a zone of increasing restriction approaching instability at the intersection. Delays to approaching vehicles may be substantial during short peaks within the peak period; however, enough cycles with lower demand occur to permit periodic clearance of developing queues, thus preventing excessive backups.
E	Capacity occurs at the upper end of this service level. It represents the most vehicles that any particular intersection can accommodate. Full utilization of every signal cycle is seldom attained no matter how great the demand.
F	This level describes forced flow operations at low speeds, where volumes exceed capacity. These conditions usually result from queues of vehicles backing up from restriction downstream. Speeds are reduced substantially and stoppages may occur for short or long periods of time due to congestion. In the extreme case, both speed and volume can drop to zero.

Source: Highway Research Board's Special Report 209: Highway Capacity Manual

The level of service criteria for unsignalized and signalized intersections are shown in **Table 3.13-3.**

Table 3.13-3: Level of Service Criteria

Level of Service	Two-Way or All-Way Stop Controlled Intersection Average Delay per Vehicle (sec)	Signalized Intersection Average Delay per Vehicle (sec)
A	0 - 10	< or = 10
B	> 10 - 15	> 10 - 20
C	> 15 - 25	> 20 - 35
D	> 25 - 35	> 35 - 55
E	> 35 - 50	> 55 - 80
F	> 50	> 80 or a V/C ratio greater than 1.0

Existing Traffic Conditions

The Specific Plan's existing conditions analysis includes existing intersection traffic volumes, traffic controls, lane geometrics, parking and pedestrian facilities, a review of existing land uses, and determination of existing levels of service at the nine intersections (seven street intersections and two freeway on/off ramps) within the Plan Area and its vicinity. The following nine intersections were analyzed for existing and future conditions:

1. Santa Anita Avenue and Valley Boulevard
2. Santa Anita Avenue and/Ramona Boulevard
3. Santa Anita Avenue and I-10 WB Ramps (Brockway Ave)
4. Santa Anita Avenue and I-10 EB Ramps (Asher St)
5. Tyler Avenue and Valley Boulevard
6. Tyler Avenue and Ramona Boulevard
7. Valley Boulevard and Ramona Boulevard
8. Peck Road and Valley Boulevard
9. Santa Anita Avenue and Valley Mall (Main Street)

The location of the nine study intersections are illustrated in **Figure 3.13-1**.

Traffic count data for these intersections were extracted from the 2014 El Monte Walmart Project EIR and the 2011 El Monte General Plan Update EIR. Counts were collected in 2012 and 2010, and therefore, the data were updated for existing 2016 traffic conditions by applying a one percent per year ambient annual growth factor consistent with Los Angeles County Congestion Management Program (CMP) maintained by the Los Angeles County Metropolitan Transportation Authority (MTA).

Four major roadways provide regional access to the Plan Area. Two major roadways – Santa Anita Avenue and Tyler Avenue provide north-south access, and two other major roadways – Valley Boulevard and Ramona Boulevard provide east-west access. The City's General Plan designation for Santa Anita Avenue and Valley Boulevard is Major Arterial, while Ramona Boulevard and Tyler Avenue are designated as Secondary Arterial. Traffic counts were conducted using automatic traffic counters on these four major roadways in the month of May, 2014. Roadway segment level of service (LOS) analysis was conducted using these traffic count data, roadway characteristics, lane geometry and roadway capacity for the following four roadway segments:

1. Santa Anita Avenue between Valley Boulevard and Ramona Boulevard
2. Valley Boulevard between Santa Anita Avenue and Tyler Avenue
3. Ramona Boulevard between Tyler Avenue and Valley Boulevard
4. Tyler Avenue between Valley Boulevard and Ramona Boulevard

Existing intersection lane configurations are shown on **Figure 3.13-2**, and existing turning movement volumes for AM and PM peak hour conditions are shown on **Figure 3.13-3.** Detailed turning movement counts as well as 24-hour daily traffic counts data are included in **Appendix F.**

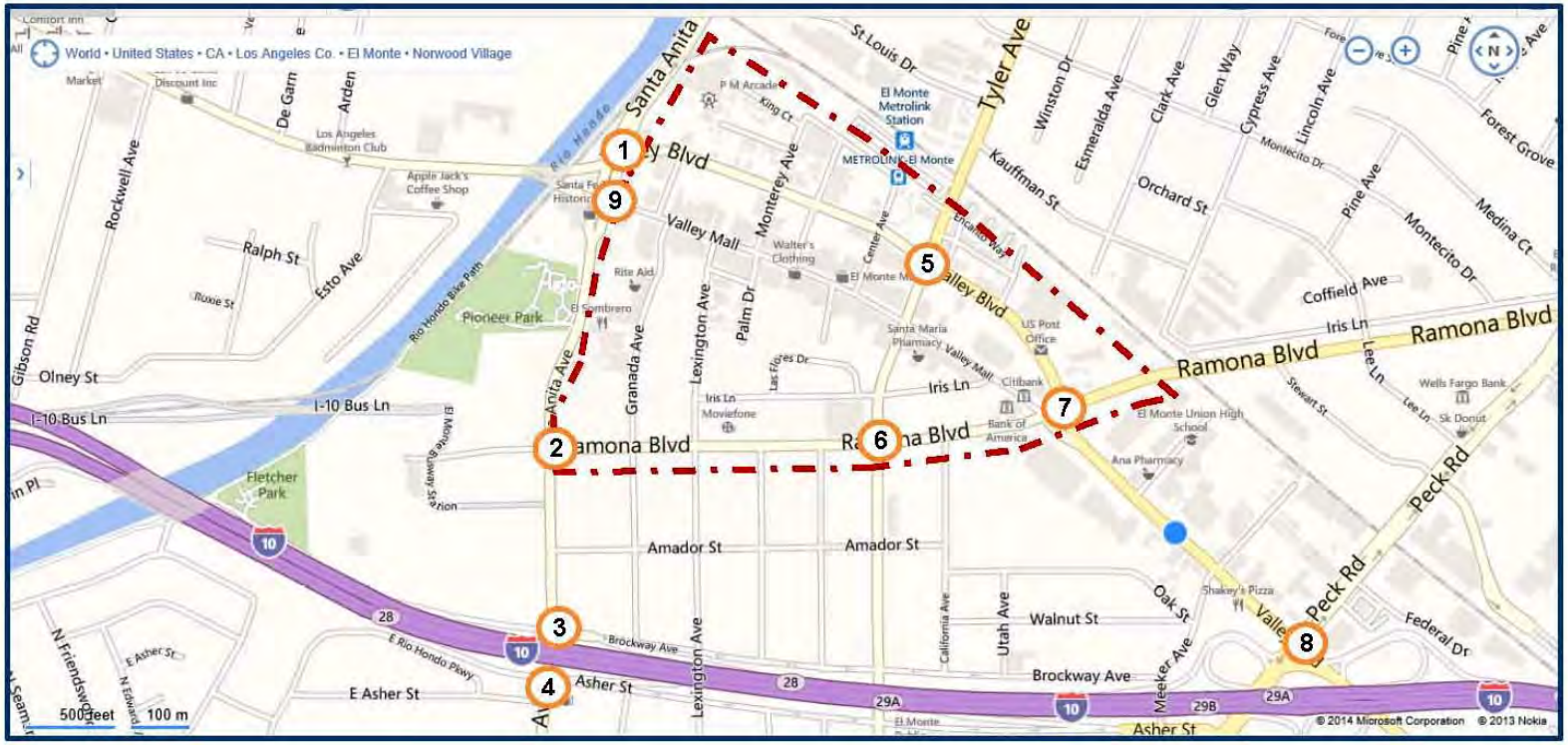

Study Intersections:

1. Santa Anita Avenue and Valley Boulevard
2. Santa Anita Avenue and/Ramona Boulevard
3. Santa Anita Avenue and I-10 WB Ramps (Brockway Ave)
4. Santa Anita Avenue and I-10 EB Ramps (Asher St)
5. Tyler Avenue and Valley Boulevard
6. Tyler Avenue and Ramona Boulevard
7. Valley Boulevard and Ramona Boulevard
8. Peck Road and Valley Boulevard
9. Santa Anita Avenue and Valley Mall (Main St)

City of El Monte Downtown Main Street Transit-Oriented Development, Specific Plan Draft EIR	**Figure 3.13-1 Study Intersections**

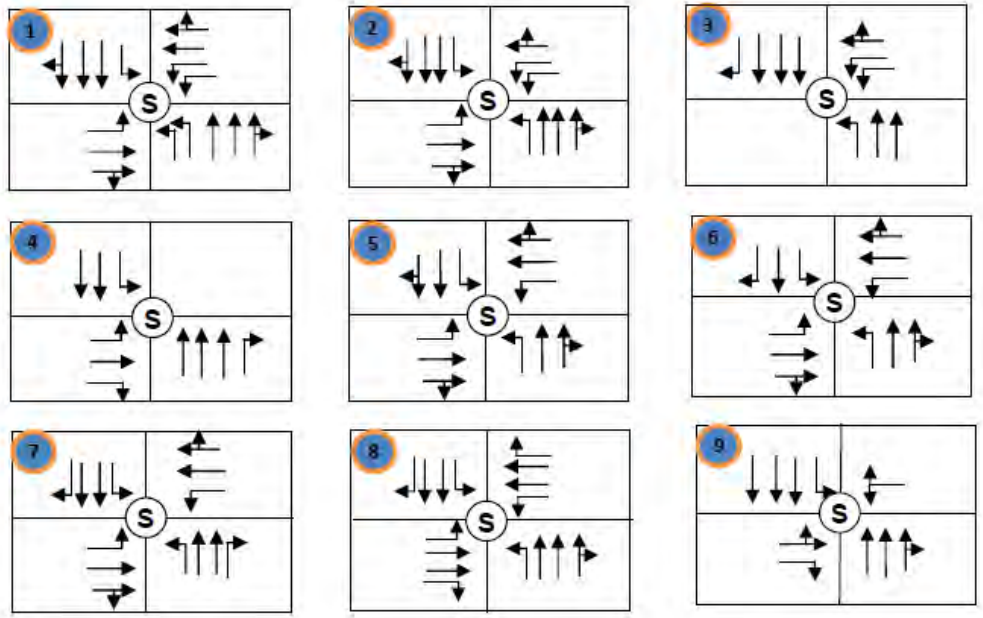

Legend:
1 = Intersection No. (S) = Signal
→ = Travel lane provided for Indicated movement

Study Intersections:

1. Santa Anita Avenue and Valley Boulevard
2. Santa Anita Avenue and/Ramona Boulevard
3. Santa Anita Avenue and I-10 WB Ramps (Brockway Ave)
4. Santa Anita Avenue and I-10 EB Ramps (Asher St)
5. Tyler Avenue and Valley Boulevard
6. Tyler Avenue and Ramona Boulevard
7. Valley Boulevard and Ramona Boulevard
8. Peck Road and Valley Boulevard
9. Santa Anita Avenue and Valley Mall (Main Street)

City of El Monte Downtown Main Street Transit-Oriented Development, Specific Plan Draft EIR	**Figure 3.13-2 Existing Intersection Lane Configurations**

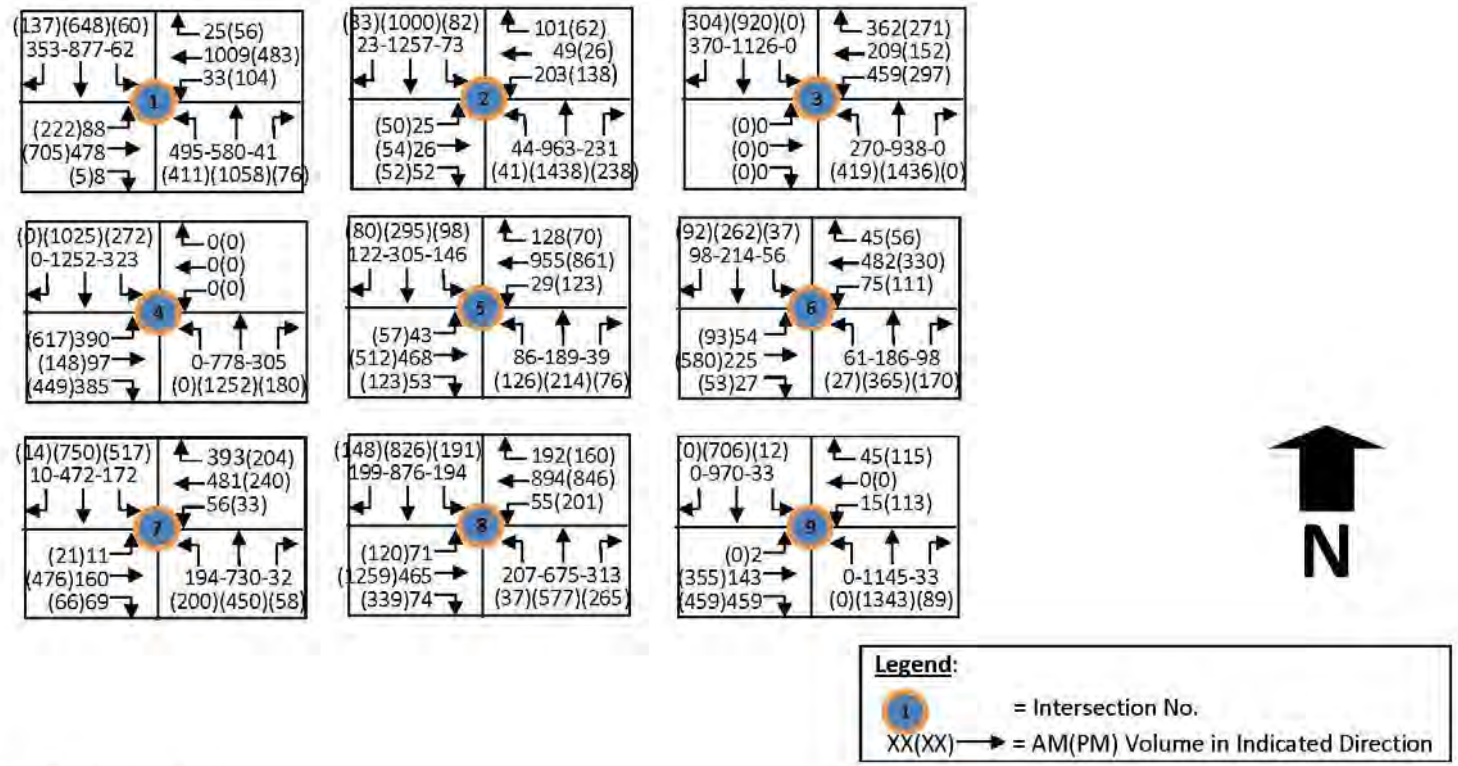

Study Intersections:

1. Santa Anita Avenue and Valley Boulevard
2. Santa Anita Avenue and/Ramona Boulevard
3. Santa Anita Avenue and I-10 WB Ramps (Brockway Ave)
4. Santa Anita Avenue and I-10 EB Ramps (Asher St)
5. Tyler Avenue and Valley Boulevard
6. Tyler Avenue and Ramona Boulevard
7. Valley Boulevard and Ramona Boulevard
8. Peck Road and Valley Boulevard
9. Santa Anita Avenue and Valley Mall (Main Street)

City of El Monte Downtown Main Street TOD Specific Plan Draft EIR	**Figure 3.13-3 Existing Turning Movement Volumes (AM and PM Peak)**

Existing Conditions and Levels of Service

Year 2016 existing traffic conditions were evaluated using the Intersection Capacity Utilization (ICU) procedure of level of service (LOS) analysis.

Table 3.13-4 presents a summary analysis of the existing intersection level of service. Detailed calculations relating to the study intersections are included in **Appendix F.** The results indicate that six of the nine study intersections are currently operating at an acceptable level of service (LOS D or better). The remaining three intersections are operating at an unacceptable LOS E during either AM or PM or both peak hours. These three unacceptable (or deficient) intersections are:

- Santa Anita Ave./Valley Blvd.
- Santa Anita Ave./I-10 EB Ramps.
- Peck Road/Valley Blvd.

Table 3.13-4: Existing 2016 Intersection Level of Service

		Existing 2016 Traffic Volumes	
Intersection	Peak Hour	V/C	LOS
1. Santa Anita Ave./Valley Blvd.	AM	0.906	E
	PM	0.713	C
2. Santa Anita Ave./Ramona Blvd.	AM	0.504	A
	PM	0.586	A
3. Santa Anita Ave./I-10 WB Ramps	AM	0.860	D
	PM	0.818	D
4. Santa Anita Ave./I-10 EB Ramps	AM	0.924	E
	PM	0.775	C
5. Tyler Ave./Valley Blvd.	AM	0.652	B
	PM	0.622	B
6. Tyler Ave./Ramona Blvd.	AM	0.470	A
	PM	0.558	A
7. Ramona Blvd./Valley Blvd.	AM	0.716	C
	PM	0.754	C
8. Peck Road/Valley Blvd.	AM	0.827	D
	PM	0.914	E
9. Santa Anita Ave./Valley Mall	AM	0.653	B
	PM	0.693	B

Source: Traffic Impact Study by Evan Brook Associates, December 2016

Table 3.13-5 presents a summary of existing level of service for roadway segments. The results indicate that all four of the roadway segments analyzed are operating at an acceptable level of service (LOS A) during peak hours and also on a weekday.

Table 3.13-5: Existing 2016 Roadway Segment Level of Service

Roadway Type	Dir.	No. of Lanes	AM Peak Hour Vol	AM Peak Hour Cap	AM Peak Hour V/C	AM Peak Hour LOS	PM Peak Hour Vol	PM Peak Hour Cap	PM Peak Hour V/C	PM Peak Hour LOS	Average Daily Traffic	Weekday Both Direction Vol	Weekday Both Direction Cap	Weekday Both Direction V/C	Weekday Both Direction LOS
Santa Anita Ave. between Valley Blvd. and Ramona Blvd.															
Major Arterial	NB	3	1,353	2,400	0.56	A	1,061	2,400	0.44	A	16,548	33,420	60,000	0.56	A
	SB	3	942	2,400	0.39	A	1,407	2,400	0.59	A	16,872				
Valley Blvd. between Santa Anita Ave. and Tyler Ave.															
Major Arterial	EB	2	484	1,600	0.30	A	843	1,600	0.53	A	9,033	18,891	40,000	0.47	A
	WB	2	828	1,600	0.52	A	683	1,600	0.43	A	9,858				
Ramona Blvd. between Tyler Ave. and Valley Blvd.															
Secondary Arterial	EB	2	390	1,400	0.28	A	505	1,400	0.36	A	5,599	10,659	35,000	0.30	A
	WB	2	469	1,400	0.33	A	343	1,400	0.24	A	5,060				
Tyler Ave. between Valley Blvd. and Ramona Blvd.															
Secondary Arterial	EB	2	279	1,400	0.20	A	573	1,400	0.41	A	5,044	9,199	35,000	0.26	A
	WB	2	363	1,400	0.26	A	346	1,400	0.25	A	4,155				

Source: Traffic Impact Study by Evan Brook Associates, July 2015,
(Ref. City of El Monte General Plan and Zoning Code Update Draft EIR, May 2011)
Note: Daily Capacity for Major Arterial is 60,000 vehicles/day (6-lane), and 40,000 vehicles/day (4-lane)
Daily Capacity for 4-lane Secondary Arterial is 40,000 vehicles/day
Peak hour Capacity for Major Arterial is 800 vehicles/hour per lane
Peak hour Capacity for Secondary Arterial is 700 vehicles/hour per lane

Caltrans Freeway Ramp Intersections

The Specific Plan's impacts at the following Freeway Ramp intersections, located in the project study area, have been analyzed since these are under Caltrans' jurisdiction:

- Santa Anita Avenue and I-10 Westbound Ramps (Brockway Ave) – Signalized
- Santa Anita Avenue and I-10 Eastbound Ramps (Asher St) - Signalized
- Peck Road and I-10 Eastbound Ramps (Asher St) - Unsignalized
- Valley Boulevard and I-10 Westbound Ramps - Unsignalized

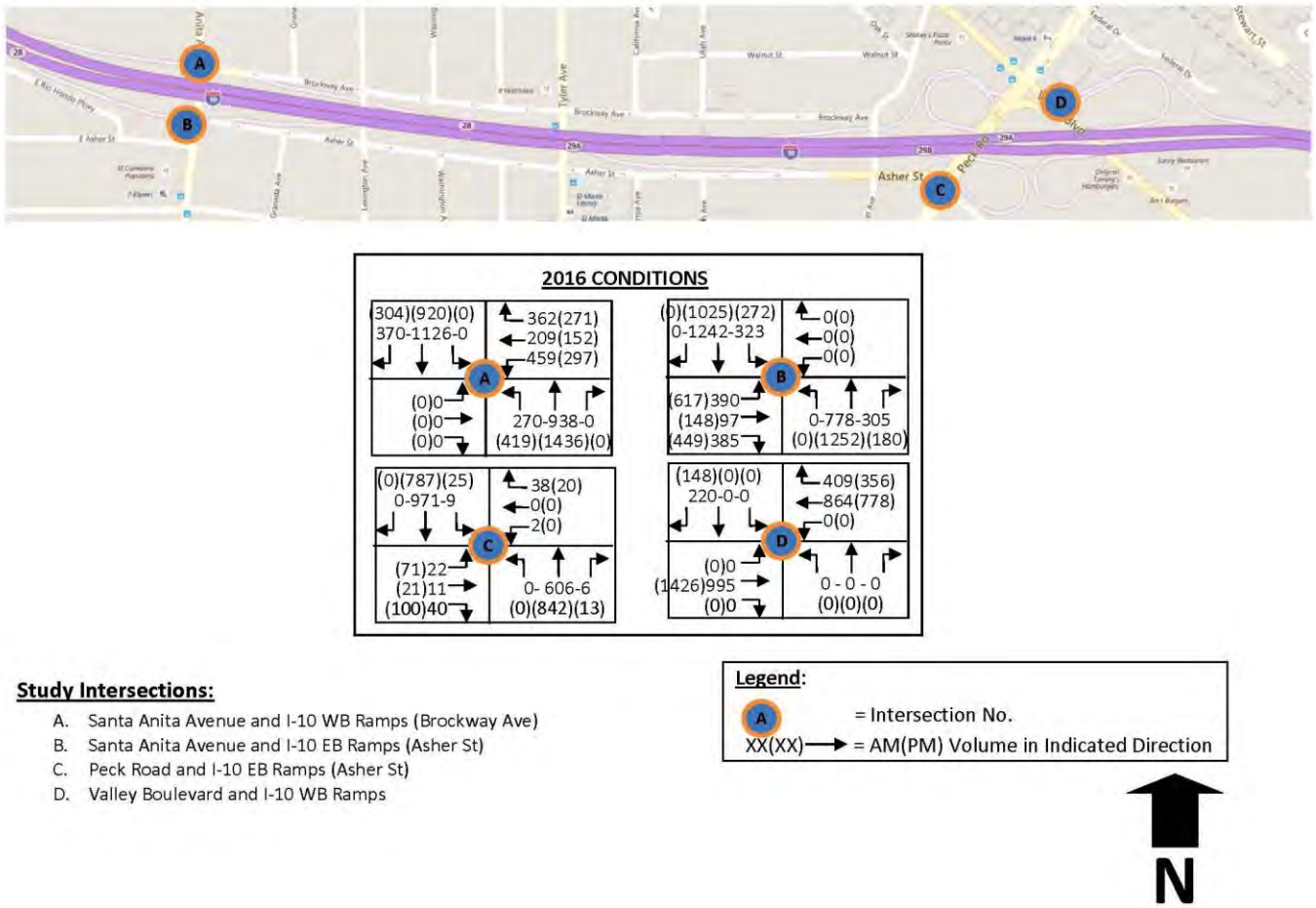

City of El Monte Downtown Main Street Transit-Oriented Development, Specific Plan Draft EIR	**Figure 3.13-4 Traffic Volumes at Caltrans Intersections 2016 Conditions**

Figure 3.13-4 shows existing 2016 traffic volumes at the Freeway Ramp intersections during the AM and PM peak hours. These volumes were based on traffic counts of turning movements conducted for other recent traffic studies for some of the related projects.

Table 3.13-6 summarizes the existing 2016 AM and PM peak hour operations of the Freeway Ramp intersections. All Caltrans' intersections operate acceptably, at LOS D or better with an exception of the intersection of Santa Anita Avenue and I-10 Westbound Ramps, which operates at LOS E during the PM peak-hour periods under existing 2016 traffic conditions.

Table 3.13-6: Existing 2016 Level of Service at Freeway Ramp Intersections

		Existing 2016 Traffic Conditions	
Intersection	Peak Hour	LOS	Delay Sec.
A. Santa Anita Ave./ 1-10 WB Ramps (Brockway Ave.) - Signalized	AM	C	33.2
	PM	E	74.5
B. Santa Anita Ave./ 1-10 EB Ramps (Asher St.) - Signalized	AM	C	27.1
	PM	D	35.0
C. Peck Road/I-10 EB Ramps (Asher St.) - Unsignalized	AM	A	1.9
	PM	B	7.1
D. Valley Blvd./I-10 WB Ramps - Unsignalized	AM	B	2.6
	PM	A	1.0

Source: Traffic Impact Study by Evan Brook Associates, December 2016

B. Regulatory Framework

Regional Regulations

Los Angeles County Metropolitan Transportation Authority, Congestion Management Program. The Congestion Management Program (CMP) was created statewide because of Proposition 111 and has been implemented locally by the MTA. The CMP for Los Angeles County requires that the traffic impact of individual development projects of potentially regional significance be analyzed. A specific system of arterial roadways plus all freeways comprises the CMP system. There are no CMP roadways and no CMP monitoring stations within the Plan Area; however, there are two regional freeways (I-10 and I-605) serving the City of El Monte that are in the CMP system.

Southern California Association of Governments, Regional Transportation Plan/Sustainable Communities Strategy. The Southern California Association of Governments (SCAG) is the designated Regional Transportation Planning Agency under state law, and is responsible for preparing the Regional Transportation Plan (RTP) including the Sustainable Communities Strategy (SCS) component pursuant to SB 375. SCAG reviews the consistency of local plans, projects, and programs with regional plans. Guidance provided by this review is intended to assist local agencies and project sponsors to take actions that contribute to the attainment of the regional goals and policies in the RTP/SCS.

The goals of the SCAG 2016 RTP/SCS that pertain to transportation include:

- Maximize mobility and accessibility for all people and goods in the region.
- Ensure travel safety and reliability for all people and goods in the region.
- Preserve and ensure a sustainable regional transportation system.

- Maximize the productivity of our transportation system.
- Protect the environment and health for our residents by improving air quality and encouraging active transportation (non-motorized transportation, such as bicycling and walking).
- Encourage land use and growth patterns that facilitate transit and non-motorized transportation.

Local Regulations

El Monte General Plan Circulation Element. The Circulation Element sets forth the following goals and policies that related to the Specific Plan:

Goal C-1. A regional freeway, rail, and airport transportation system that meets the needs of business, facilitates efficient movement of goods, and minimizes adverse effects on El Monte's residential neighborhoods.

C-1.2 Access to Downtown. Support implementation of the Mid Valley Transit Corridor and associated improvements along Ramona Boulevard and across the San Gabriel River to the City of Baldwin Park and improve connection to the El Monte Transit Station to increase ridership and coordinate transit services.

C-1.5 Freight Movement. Improve freight movement by focusing regional and truck through-traffic onto designated truck route corridors. Coordinate with Alameda Corridor East Authority (ACE) to eliminate at-grade railroad crossings in El Monte, wherever feasible.

C-1.6 Support Regional Improvements. Coordinate with regional authorities and adjacent jurisdictions to address the impact of trips originating outside of and passing through the City.

C-1.7 Traffic Mitigations. Require cost of transportation mitigations and improvements needed for new development to be borne by applicants. For mitigation required for regionally significant projects, developers shall pay a fee to help fund a project-specific report.

Goal C-2: Provide and maintain an efficient roadway system that supports multimodal transportation, serving all parts of El Monte.

C-2.1 Balance the Roadway System and Land Uses. Provide a safe and efficient street system to support the City's mobility goals for all transportation modes and the General Plan goals.

C-2.2 Roadway Performance Standards. The City desires to maintain a level of service (LOS) D throughout the City, except that LOS E may occur in the following circumstances:

- Intersections/roadways at, or adjacent to, freeway ramps
- Intersections/roadways on major corridors and transit routes
- Intersections/roadways on truck routes
- Intersections/roadways in or adjacent to commercial districts

These standards may require, but are not intended to mandate, roadway and/or intersection widening. They are a policy goal and shall be used to monitor traffic conditions to assess the impacts of new development. As LOS standards apply only to vehicles and do not account for walkability or other modes, they shall not be the sole criteria for judging transportation system performance. Pedestrian walkability and convenience, livability, transit access, operability, and aesthetics shall also be performance criteria.

C-2.3 Fully Developed Street System. Fully develop the street system in the City by adding to the missing street grid or reconfiguring the existing street grid in the west-central part of the City, Study Area #1, to help ensure efficient traffic flow.

C-2.5 Context-Sensitive Street Standards. Design and operate streets and intersections to be sensitive to adjacent land uses and districts and to all roadway users, including transit, bicycles, and pedestrians, where appropriate.

C-2.6 Roadway Sizing. Provide appropriate roadway sizing in the City. Where roads are wider than traffic requires, consider converting surplus space to landscaped medians, bike lanes, and wider sidewalks, to make the road more pedestrian and bicycle friendly.

C-2.7 Maintain Infrastructure. Develop and maintain adequate funding sources and maintenance programs for the ongoing maintenance and upkeep of City transportation

Goal C-3. A well-managed traffic management system that maximizes the operational efficiency of existing roadways, encourages a balance of transportation modes, and improves the safety and livability of neighborhoods.

C-3.1 Operational Efficiency. Maximize the operational efficiency of the arterial roadway system with the implementation of traffic management and traffic signal operations measures without adversely impacting transit, bicycles, and pedestrians.

C-3.2 Traffic Flow Management. Manage traffic flow on roadways for appropriate vehicle speeds, calm traffic in the City, and protect neighborhoods from traffic intrusion. Apply appropriate techniques to control the volume and speed of traffic consistent with land use policy, sensitive uses, and other concerns.

C-3.3 Neighborhood Traffic. Work with community representatives, neighborhood groups, businesses, and residents to develop creative strategies to address traffic, congestion, and transportation issues unique to neighborhoods or districts.

C-3.4 Safe Routes to Schools. Work with school districts to identify safe routes to all schools, enabling better school access by cyclists and pedestrians. Support safe drop-off and pick-up zones around schools during the morning and afternoon peak hours.

C-3.5 Through Traffic. Work with adjacent cities, the County of Los Angeles, and other government entities to minimize the adverse traffic impacts on El Monte streets from traffic originating outside the City and passing through the City.

C-3.6 Traffic Signal Management. Pursue development and implementation of a Traffic Management System, with a traffic management center in the City or a joint center with adjacent jurisdictions and/or the County of Los Angeles, to coordinate and manage the City's traffic signal system, integrate operations on City streets, and implement advanced traffic management technologies where appropriate.

Goal C-4. A local and regional transit service that is accessible and safe; connects to homes, residences, parks, and other community destinations; and provides a viable alternative to the use of autos.

C-4.1 Transit Service Coverage. Provide transit routes that more directly serve residential neighborhoods, and improve transit service to Flair Park that connects to the El Monte Transit Center. Seek to provide transit within a quarter mile of residents and activity nodes.

C-4.2 Regional Bus Transit. Work with LACMTA and Foothill Transit to enhance regional transit connections in the City through additional routes and increased service frequency. Support LACMTA expansion of rapid bus service in the region and particularly on routes serving the City.

C-4.3 Enhanced Local Bus Transit. Continue to adjust and enhance the local transit circulator service in the community, particularly to serve local neighborhoods, schools and parks, key commercial districts, and the regional bus and rail transit stations.

C-4.4 Regional Transit Stations. Support the efficient operation of the El Monte Transit Station and the Metrolink Station, and focus bus transit routes, the bicycle network, and pedestrian corridors to these facilities to maximize potential for transit ridership.

C-4.5 Improved Bus Transit Amenities. Improve amenities at bus stops, including attractive and convenient stops with shade/weather protection, seats, transit information, bus shelters, landscaping, etc., as appropriate.

C-4.6 Regional Transit Improvements. Support the planning, design, and implementation of the Mid Valley Transportation Corridor along Ramona Boulevard and Badillo; coordinate with LACMTA regarding improvements to the El Monte Transit Station.

C-4.7 Metrolink Improvements. Support improvement of connections from the Metrolink Station to the El Monte Gateway Project, Flair Park, and Northwest El Monte through improvements to transit and infrastructure systems as deemed appropriate.

Goal C-5. A connected, balanced, and integrated system of walking, biking, and equestrian paths and trails that is accessible and safe and connect to homes, residences, parks, and other community destinations.

C-5.1 Citywide Bicycle Network. Develop and maintain a citywide and diversified network of bicycle paths, lanes, and streets that connect to neighborhoods, park and recreational amenities, schools, activity centers, and the Emerald Necklace.

C-5.2 Regional Coordination. Coordinate development of the City's bike network with adjacent jurisdictions, LACMTA (and its Bicycle Transportation Strategic Plan), Los Angeles County, and the Emerald Necklace, to maximize system connectivity.

C-5.3 Bicycle Hubs. Establish bike hubs in the community (centralized locations with convenient bike parking for trip destinations or transfer to other transportation modes) at key transit nodes or commercial nodes.

C-5.4 Bicycle Amenities. Provide bicycle amenities throughout the City, including items such as bike racks, bike lockers, and traffic signal crossing buttons for bicyclists.

C-5.5 Citywide Pedestrian Network. Establish a citywide network of sidewalks, trails, and paths that connects neighborhoods, schools, open space, and major destinations, where feasible. Coordinate provision of the pedestrian network with adjacent jurisdictions.

C-5.6 Pedestrian Amenities. Provide amenities along pedestrian routes, such as well-maintained and landscaped sidewalks, tree shade cover, benches, pedestrian phases at signalized intersections, and midblock signalized or well-signed pedestrian crosswalks.

Goal C-6. Integration of circulation and land use development policies and practices that support walking, bicycling, and use of transit through a variety of supportive land use development and urban design measures.

C-6.1 Transportation Demand Management. Encourage a reduction of vehicle miles, a reduction of the total number of daily peak hour vehicular trips, an increase the vehicle occupancy rate, and better utilization of the circulation system through TDM.

C-6.2 New and Substantially Rehabilitated Development. Require new development to provide amenities for transit, bicyclists, and pedestrians and to provide connections to the bicycle and pedestrian networks where appropriate.

C-6.3 Parking Districts. Encourage parking districts in the downtown, Flair Park, and other appropriate areas to enable the efficient and cost-effective provision and use of parking, including the possible construction of parking structures.

C-6.4 Parking Supply. Require residential, commercial, industrial, and other land uses in the community to provide adequate onsite parking for their respective uses; allow for joint-use parking provided the parking needs of individual uses are satisfied.

C-6.5 Land Use Strategies. Encourage the focusing of residential development densities and nonresidential building intensities within transit-oriented districts, along transit corridors, and near transit hubs and transit stations.

C-6.6 Project Mitigation. Require appropriate mitigation measures to be implemented by projects that have a significant or potentially significant impact on the transportation network.

C-6.7 Transit Stops. Consider the incorporation of turnouts along roadways that have access to larger existing or new commercial and/or residential projects to encourage the use of transit service.

C. Significance Threshold

The following thresholds of significance are based on Appendix G of the CEQA Guidelines, as amended. For purposes of this EIR, implementation of the proposed Specific Plan may have a significant adverse impact on transportation if it would result in any of the following:

- Cause an increase in traffic which is substantial in relation to the existing traffic load and capacity of the street system (i.e., result in a substantial increase in either the number of vehicle trips, the volume to capacity ratio on roads, or congestion at intersections)
- Exceed, either individually or cumulatively, a level of service standard established by the county congestion management agency for designated roads or highways.
- Result in inadequate parking capacity.
- Conflict with adopted policies, plans, or programs supporting alternative transportation (e.g., bus turnouts, bicycle racks)

A project's traffic impact on the circulation system is determined by comparing the level of service and V/C ratios at key intersections under the future pre-project conditions and future post-project conditions. A LOS D or better is acceptable for urban area intersections, and a level of service worse than D (i.e., LOS E or F) is unacceptable.

In addition, a Caltrans Freeway Facilities Analysis was included in the Traffic Impact Study conducted for the Specific Plan. Caltrans has established the following significance thresholds for impacts associated with freeway ramp intersections and freeway ramp queuing.

- A significant impact occurs at a freeway ramp intersection when the project-generated trips causes its peak hour level of service to change from an acceptable operation (LOS A,B, C, or D) to a deficient operation (LOS E or F).
- A significant impact occurs at a Caltrans highway ramp if it adds at least 10 weekday peak hour trips when the ramp is operating at a deficient level of service (i.e., queuing exceeds storage capacity).

- A significant project impact occurs at a freeway segment when project generated peak hour trips causes the peak hour level of service of the study segment to change from an acceptable operation (LOS D or better) to a deficient operation (LOS E or worse).
- The project adds at least 50 Project-generated peak hour trips to the study freeway segment.

D. Impacts and Mitigation Measures

Impact T-1

Impact T-1	Implementation of the Specific Plan will generate a total of 21,370 trips per day and result in five of nine study intersections operating at an unacceptable LOS E or F during either the AM or PM peak hours (or both peak hours) under 2035 cumulative traffic condition with Project. The increase in the V/C ratio at the five intersections would exceed the threshold of significant impact.

Traffic generation was based on the development potential of the Plan Area by 2035. **Table 3.13-7** shows the estimated increase of 21,370 daily trips over existing conditions. For trip distribution purposes, the percentage increases of existing trips due to cumulative developments were applied to existing peak hour volumes at each study intersection. The results provided traffic volumes at each study intersection under 2035 cumulative traffic plus Project.

Table 3.13-7: Trip Generation by Specific Plan Development, 2035

ITE Land Use Code	Land Use	Amount of Units	Estimated Trip Generation						
			Daily	AM Total	AM In	AM Out	PM Total	PM In	PM out
220	Residential Multi-Family[1]	2,200 DU	14,630	1,122	224	898	1,364	887	477
820	Commercial (65%) Retail[2]	325.0 KSF	13,956	325	198	127	1,212	594	618
	Less Pass-by Trips		-2,791	-65	-40	-25	-242	-119	-124
931	Commercial (20%) Restaurant[3]	100.0 KSF	8,995	81	41	41	749	502	247
710	Commercial (15%) Office[4]	75.0 KSF	827	117	103	14	112	19	93
Total			35,617	1,580	526	1,054	3,195	1,883	1,312
Internal Capture (20%)			-7,123	-316	-105	-211	-639	-377	-262
Transit Credits (20%)			-7,123	-316	-105	-211	-639	-377	-262
Net Total			21,370	948	316	632	1,917	1,130	787

Source: Traffic Impact Study by Evan Brook Associates, December 2016
Assumptions:
[1] Multi-Family Apartments
[2] Shopping Centers
[3] Quality Restaurants
[4] General Office

Level of service analysis was conducted for the nine key intersections for the years 2020 and 2035 with projected future traffic volumes with and without the Specific Plan. The results indicate that five of the nine study intersections would be operating at an unacceptable LOS E or F during either AM or PM or both peak hours under 2020 cumulative traffic conditions with Project. The 2020 results are illustrated in **Figure 3.13-5** and presented in **Table 3.13-8**. These five intersections include:

- Santa Anita Ave. and Valley Blvd.
- Santa Anita Ave. and I-10 WB Ramps
- Santa Anita Ave. and I-10 EB Ramps
- Ramona Blvd. and Valley Blvd.
- Peck Road and Valley Blvd.

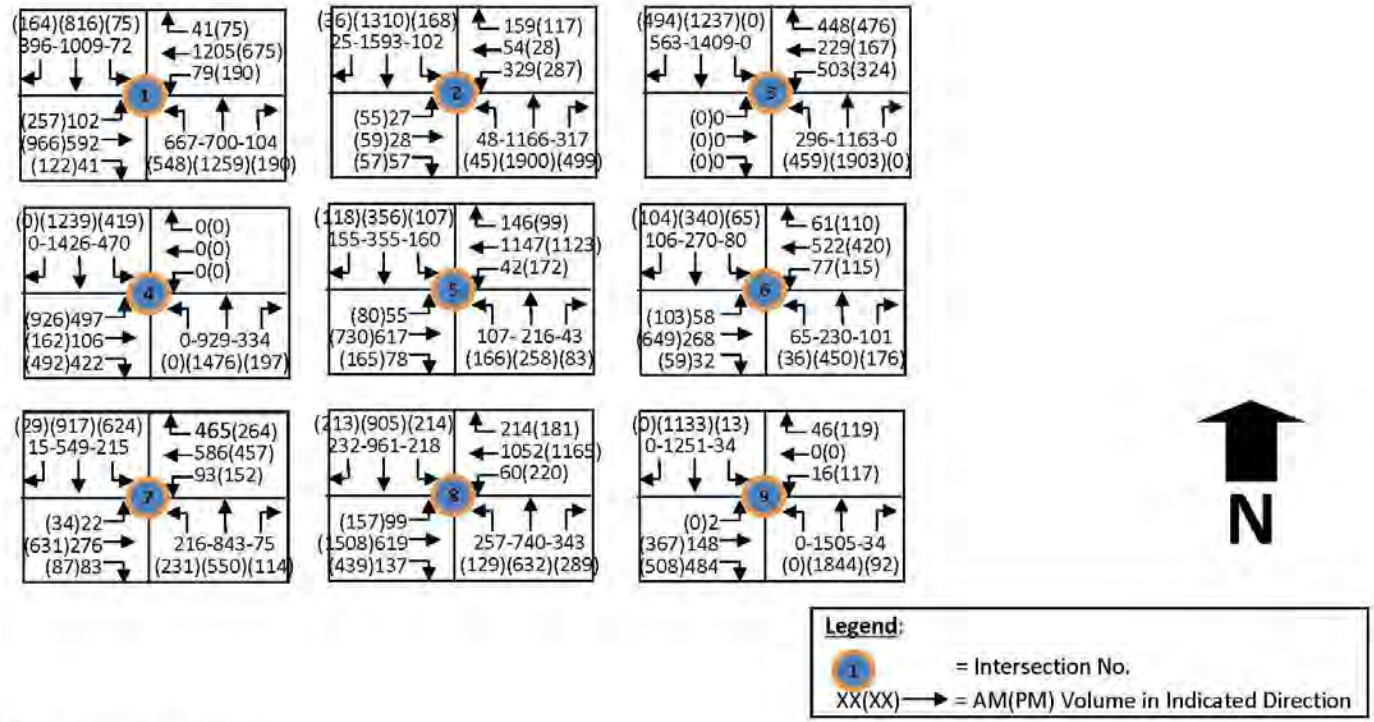

Study Intersections:

1. Santa Anita Avenue and Valley Boulevard
2. Santa Anita Avenue and/Ramona Boulevard
3. Santa Anita Avenue and I-10 WB Ramps (Brockway Ave)
4. Santa Anita Avenue and I-10 EB Ramps (Asher St)
5. Tyler Avenue and Valley Boulevard
6. Tyler Avenue and Ramona Boulevard
7. Valley Boulevard and Ramona Boulevard
8. Peck Road and Valley Boulevard
9. Santa Anita Avenue and Valley Mall (Main Street)

City of El Monte Downtown Main Street Transit-Oriented Development, Specific Plan Draft EIR	**Figure 3.13-5 2020 Peak Hour Cumulative Traffic Conditions With Specific Plan**

Table 3.13-8: 2020 Intersection Level of Service With and Without Specific Plan

Intersection	Peak Hour	Future 2020 Traffic Conditions Without Specific Plan V/C	LOS	With Specific Plan V/C	LOS	+/- V/C
1. Santa Anita Ave./Valley Blvd.	AM	1.042	F	1.078	F	*0.033*
	PM	0.844	D	0.900	E	***0.056***
2. Santa Anita Ave./Ramona Blvd.	AM	0.571	A	0.623	B	0.052
	PM	0.669	B	0.841	D	**0.172**
3. Santa Anita Ave./I-10 WB Ramps	AM	0.958	E	1.060	F	***0.102***
	PM	0.937	E	1.098	F	***0.161***
4. Santa Anita Ave./I-10 EB Ramps	AM	1.026	F	1.075	F	***0.049***
	PM	0.866	D	1.011	F	***0.145***
5. Tyler Ave./Valley Blvd.	AM	0.737	C	0.765	C	0.028
	PM	0.724	C	0.783	C	0.059
6. Tyler Ave./Ramona Blvd.	AM	0.506	A	0.528	A	0.022
	PM	0.597	A	0.630	B	0.033
7. Ramona Blvd./Valley Blvd.	AM	0.811	D	0.840	D	0.029
	PM	0.868	D	0.981	E	***0.113***
8. Peck Road/Valley Blvd.	AM	0.905	E	0.951	E	***0.046***
	PM	1.003	E	1.072	F	***0.069***
9. Santa Anita Ave./Valley Mall (Main St.)	AM	0.716	C	0.744	C	0.028
	PM	0.752	C	0.829	D	0.077

Source: Traffic Impact Study by Evan Brook Associates, December 2016
*Note: Italic and **Bold** indicate significant impacts*

The year 2035 traffic conditions were analyzed with and without the Specific Plan to determine the potential traffic impacts of the Specific Plan on traffic circulation system at buildout. The Traffic Impact Study conducted a level of service analysis of the nine key intersections for projected future 2035 traffic volumes with and without the Specific Plan. The results are shown in **Table 3.13-8**. As the results indicate, five of the nine study intersections are expected to operate at an unacceptable LOS (i.e. LOS E or F) during either the AM or PM peak hours (or both peak hours) under 2035 cumulative traffic conditions with Project. The increase in the V/C ratio at these intersections would exceed the threshold of significant impacts. These intersections are:

- Santa Anita Avenue and Valley Boulevard
- Santa Anita Avenue and I-10 WB Ramps
- Santa Anita Avenue and I-10 EB Ramps
- Ramona Boulevard and Valley Boulevard
- Peck Road and Valley Boulevard

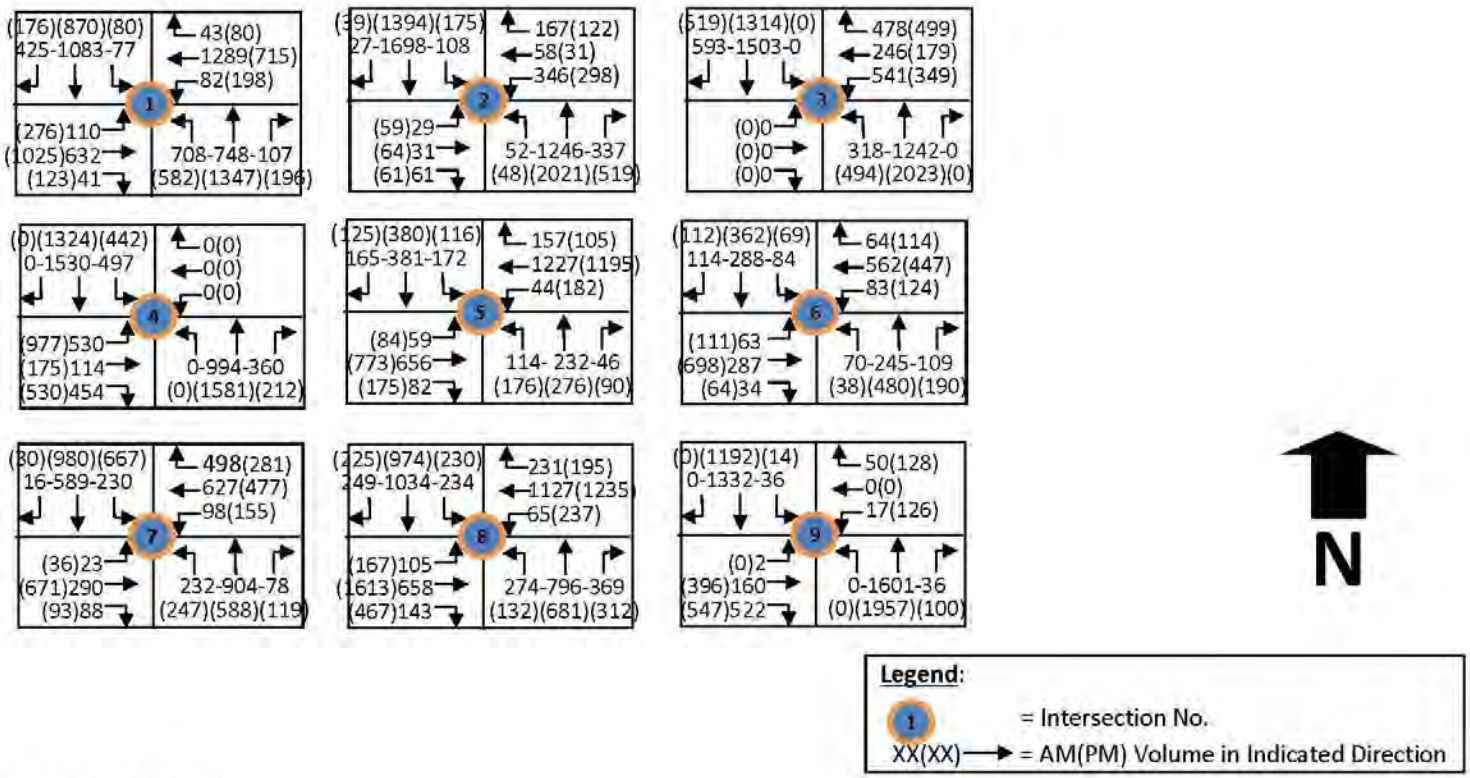

Study Intersections:

1. Santa Anita Avenue and Valley Boulevard
2. Santa Anita Avenue and/Ramona Boulevard
3. Santa Anita Avenue and I-10 WB Ramps (Brockway Ave)
4. Santa Anita Avenue and I-10 EB Ramps (Asher St)
5. Tyler Avenue and Valley Boulevard
6. Tyler Avenue and Ramona Boulevard
7. Valley Boulevard and Ramona Boulevard
8. Peck Road and Valley Boulevard
9. Santa Anita Avenue and Valley Mall (Main Street)

City of El Monte Downtown Main Street Transit-Oriented Development, Specific Plan Draft EIR	**Figure 3.13-6 2035 Peak Hour Cumulative Traffic Conditions With Specific Plan**

Table 3.13-9: 2035 Intersection Level of Service With and Without Specific Plan

Intersection	Peak Hour	Future 2035 Traffic Conditions Without Specific Plan V/C	LOS	With Specific Plan V/C	LOS	+/- V/C
1. Santa Anita Ave./Valley Blvd.	AM	1.110	F	1.145	F	***0.039***
	PM	0.896	E	0.948	F	***0.052***
2. Santa Anita Ave./Ramona Blvd.	AM	0.605	B	0.656	B	0.051
	PM	0.709	C	0.881	D	0.172
3. Santa Anita Ave./I-19 WB Ramps	AM	1.021	F	1.123	F	***0.102***
	PM	0.997	E	1.157	F	***0.160***
4. Santa Anita Ave./I-10 EB Ramps	AM	1.095	F	1.144	F	***0.049***
	PM	0.922	E	1.065	F	***0.143***
5. Tyler Ave./Valley Blvd.	AM	0.783	C	0.881	D	0.028
	PM	0.768	C	0.827	D	0.059
6. Tyler Ave./Ramona Blvd.	AM	0.536	A	0.559	A	0.023
	PM	0.635	B	0.668	B	0.033
7. Ramona Blvd./Valley Blvd.	AM	0.863	D	0.892	D	0.029
	PM	0.922	E	1.036	F	***0.114***
8. Peck Road/Valley Blvd.	AM	0.966	E	1.012	F	***0.046***
	PM	1.031	F	1.139	F	***0.108***
9. Santa Anita Ave./Valley Mall (Main St.)	AM	0.762	C	0.790	C	0.028
	PM	0.802	C	0.879	D	0.077

Source: Traffic Impact Study by Evan Brook Associates, December 2016
*Note: Italic and **Bold** indicate significant impacts*

Mitigation Measures

In order to mitigate 2020 and 2035 cumulative traffic impacts at the identified intersections, a number of transportation improvement measures should be considered for implementation to improve the level of service to acceptable range of LOS D or better.

The following is a list of site-specific mitigation measures to improve the five intersections to perform at LOS to D or better:

- **Santa Anita Avenue and Valley Boulevard.**

  2020. Add 1 right-turn lane by widening and restripe existing through-right lane as through lane on the southbound approach, and restripe the westbound approach to provide 1 left-turn, 2 through and 1 shared through-right lane. Currently, the approach is striped for 2 left turn, 1 through and 1 shared through-right lane. The proposed mitigation will require 1 additional through lane on the westbound approach. This will improve the intersection LOS from F (V/C ratio = 1.078) to LOS D (V/C ratio = 0.865) during the AM peak hour, and from D (V/C ratio = 0.900) to LOS D (V/C ratio = 0.866) during the PM peak hour.

  2035. In addition to 2020 mitigation (i.e., add 1 right-turn lane by widening, and restripe existing through-right lane as through lane on the southbound approach, and restripe westbound approach to

provide 1 left-turn lane, 2 through lanes and 1 shared through-right lane), restripe eastbound approach to provide 2 left-turn lanes, 2 through lanes and 1 shared through-right lane (i.e., provide 1 additional through lane and 1 additional left-turn lane on the eastbound approach). This will improve the intersection LOS from F (V/C ratio = 1.145) to LOS D (V/C ratio = 0.893) during the AM peak hour, and from E (V/C ratio = 0.948) to LOS C (V/C ratio = 0.791) during the PM peak hour

- Santa Anita Avenue and I-10 WB Ramps

  2020. Widen and restripe the westbound approach to provide 1 left-turn, 1 shared through-left lane and 2 shared through-right lanes. Currently, the approach is striped for 1 left-turn lane, 1 shared through-left lane and 1 shared through-right lane. The proposed mitigation will require 1 additional shared through-right lane on the westbound approach. This will improve the intersection LOS from F (V/C ratio = 1.006) to LOS C (V/C ratio = 0.766) during the AM peak hour, and from F (V/C ratio = 1.098) to LOS D (V/C ratio = 0.896) during the PM peak hour. Since this intersection is also under Caltrans' jurisdiction, approval on any modifications will be needed from Caltrans.

  2035. In addition to 2020 mitigation (i.e., widen and restripe the westbound approach to provide 1 left-turn, 1 shared through-left lane and 2 shared through-right lanes), restripe northbound approach to provide 1 left-turn lane, 1 shared left-through lane, and 2 through lanes (i.e., provide 1 additional shared left-through lane on the northbound approach). This will improve the intersection LOS from F (V/C ratio = 1.123) to LOS D (V/C ratio = 0.830) during the AM peak hour, and from F (V/C ratio = 1.157) to LOS D (V/C ratio = 0.843) during the PM peak hour. Since this intersection is under Caltrans' jurisdiction and also under an overpass, major reconstruction works and approval on any modifications will be needed from Caltrans.

- Santa Anita Avenue and I-10 EB Ramps

  2020. Widen and restripe eastbound approach to provide 2 left-turn, 1 shared left-turn plus through lane and 2 right-turn lanes, and restripe southbound approach to provide 2 left-turn and 2 through lanes. Currently, the eastbound approach is striped for 1 left-turn, 1 shared left-turn plus through and 1 right-turn lane. The proposed mitigation will require 1 additional left-turn and 1 additional right-turn lanes on eastbound approach, and 1 additional left-turn lane on southbound approach. This will improve the intersection LOS from F (V/C ratio = 1.075) to LOS D (V/C ratio = 0.828) during the AM peak hour, and from F (V/C ratio = 1.011) to LOS C (V/C ratio = 0.766) during the PM peak hour. Since this intersection is under Caltrans' jurisdiction and also under an overpass, major reconstruction works and approval on any modification will be needed from Caltrans

  2035. With the 2020 mitigation measures (i.e., widen and restripe the eastbound approach to provide 2 left-turn, 1 shared left-through lane and 2 right-turn lanes, and restripe the southbound approach to provide 2 left-turn and 2 through lanes for which Caltrans approval on major reconstruction works and any modifications will be needed as it is under Caltrans' jurisdiction and also under an overpass) installed, no further mitigation will be required. The 2020 mitigation will improve the intersection LOS from F (V/C ratio = 1.114) to LOS D (V/C ratio = 0.880) during the AM peak hour, and from F (V/C ratio = 1.065) to LOS C (V/C ratio = 0.807) during the PM peak hour under 2035 conditions.

- Ramona Boulevard and Valley Boulevard

  2020. Restripe southbound approach to provide 2 left-turn, 2 through and 1 right-turn lane. Currently, the approach is striped for 1 left-turn, 2 through and 1 right-turn lane. The proposed mitigation will require 1 additional left-turn lane on southbound approach. This will improve the intersection LOS from D (V/C ratio = 0.840) to LOS C (V/C ratio = 0.781) during the AM peak hour, and from E (V/C ratio = 0.981) to LOS D (V/C ratio = 0.850) during the PM peak hour.

2035. With the 2020 mitigation measures (i.e., restripe the southbound approach to provide 2 left-turn lanes, 2 through lanes and 1 right-turn lane) installed, no further mitigation will be required. The 2020 mitigation will improve the intersection LOS from D (V/C ratio = 0.892) to LOS D (V/C ratio = 0.828) during the AM peak hour, and from F (V/C ratio = 1.036) to LOS D (V/C ratio = 0.896) during the PM peak hour under 2035 conditions.

- **Peck Road and Valley Boulevard**

  2020. Restripe eastbound approach to provide 1 left-turn, 3 through and 1 right-turn lane, and restripe westbound approach to provide 2 left-turn, 3 through and 1 right-turn lane. Currently, the eastbound approach is striped for 1 left-turn, 2 through and 1 right-turn lane, and the westbound approach is striped for 1 left-turn, 2 through and 1 right-turn lane. The proposed mitigation will require 1 additional through lane on the eastbound approach, and 1 additional left-turn and 1 additional through lane on the westbound approach. This will improve the intersection LOS from E (V/C ratio = 0.951) to LOS D (V/C ratio = 0.842) during the AM peak hour, and from F (V/C ratio = 1.072) to LOS D (V/C ratio = 0.854) during the PM peak hour.

  2035. In addition to 2020 mitigation (i.e., restripe the eastbound approach to provide 1 left-turn lane, 3 through lanes and 1 right-turn lane, and restripe the westbound approach to provide 2 left-turn lanes, 3 through lanes and 1 right-turn lane), restripe the southbound approach to provide 1 left-turn lane, 3 through lanes and 1 right-turn lane (i.e., provide 1 additional through lane on the southbound approach). This will improve the intersection LOS from F (V/C ratio = 1.012) to LOS C (V/C ratio = 0.789) during the AM peak hour, and from F (V/C ratio = 1.139) to LOS D (V/C ratio = 0.869) during the PM peak hour.

Significance After Mitigation

The residual impact following implementation of all the recommended Mitigation Measures for Impact T-1 would be ***less than significant.***

Impact T-2

Impact T-2	There are no CMP arterial monitoring intersections within the City of El Monte, and therefore, there are no CMP impacts associated with the Specific Plan.

The Los Angeles County Metropolitan Transportation Authority, Congestion Management Program requires analysis of all CMP arterial monitoring intersections in the project vicinity, including monitored freeway on-ramps or off-ramps, where the proposed project will add 50 or more trips during either the AM or PM weekday peak hours. Where project definition is insufficient for meaningful intersection level of service analysis, CMP arterial segment analysis may substitute for intersection analysis. If CMP arterial segments are being analyzed rather than intersections, the study area must include all segments where the proposed project will add 50 or more peak hour trips (total of both directions). Within the study area, the traffic impact analysis must analyze at least one segment between monitored CMP intersections.

The CMP also requires an analysis of nearby mainline freeway monitoring locations where the project will add 150 or more trips, in either direction, during either the AM or PM weekday peak hours.

For purposes of the CMP, a significant impact occurs when the proposed Specific Plan increases traffic demand on a CMP facility by two percent of capacity (V/C ≥.0.02), causing LOS F (V/C > 1.00); if the facility is already at LOS F, a significant impact occurs when the proposed project increases traffic demand on a CMP facility by two percent of capacity (V/C ≥ 0.02).

Although there are no CMP arterial monitoring intersections within the City of El Monte, a total of five freeway on-ramp and off-ramp intersections of I-10 in vicinity of the Plan Area were analyzed using project related traffic volumes distributed on to these freeway on- and off-ramps. These are:

- I-10 Freeway EB On/Off-ramp at Santa Anita Avenue
- I-10 Freeway WB On/Off-ramp at Santa Anita Avenue
- I-10 Freeway EB Off-ramp Peck Road
- I-10 Freeway WB On-off-ramps at Peck Road
- I-10 Freeway EB On-ramps at Valley Boulevard

The project traffic distribution indicates there will be a maximum of 214 trips on I-10 Freeway during the PM peak hours in the eastbound direction on the west of Santa Anita Avenue. Also, there will be a maximum of 145 trips on I-10 Freeway during the PM peak hours in the westbound direction on the east of Peck Road. The project traffic volume on the west of Santa Anita Avenue exceeds the 150 trips threshold of freeway monitoring location analysis requirement per MTA's CMP guidelines. Therefore, this freeway monitoring location is required to be analyzed as part of this traffic impact analysis. All the freeway monitoring locations in the Plan Area vicinity were included in Caltrans Freeway Facilities analysis section of this report.

Mitigation Measure

No mitigation is required.

Significance After Mitigation

Since no mitigation measure was required, the impact would remain less than significant.

Impact T-3

Impact T-3 All Caltrans' intersections operate acceptably, at LOS D or better, with an exception of the intersection of Santa Anita Avenue and I-10 Westbound Ramps, which operates at LOS F during the PM peak-hour periods under both Without- and With-Specific Plan traffic conditions, and the intersection of Santa Anita Avenue and I-10 Eastbound Ramps, which operates at LOS F during both the AM and PM peak-hour periods under both Without- and With-Specific Plan traffic conditions. However, improvements have been identified to achieve City of El Monte's minimum LOS standards as both these intersections are impacted under future conditions per City of El Monte thresholds of significance

California State Department of Transportation requires a freeway/State Highway impact analysis, utilizing Caltrans' "Guide for the Preparation of Traffic Impact Studies" and specifies the use of the Highway Capacity Manual (HCM) method of intersection capacity and LOS analysis to evaluate performance of signalized and unsignalized intersections during the weekday morning and evening peak hours.

Traffic volumes at the study intersections for 2020 were developed from existing 2016 volumes using a growth factor of 0.82 percent per year between 2016 and 2020, consistent with traffic growth projection factors established by Los Angeles County Congestion Management Plan. Volumes from related projects were distributed to these intersections, and added to the projected 2020 volumes to develop 2020 volumes Without-Specific Plan conditions. Similarly, Specific Plan-related traffic volumes were distributed to the study intersections, and added to the 2020 Without-Specific Plan volumes to develop 2020 With-Specific Plan volumes.

Figure 3.13-7 shows 2020 traffic volumes Without-Specific Plan and With-Specific Plan conditions at the study intersections for the AM and PM peak hours. **Table 3.13-10** summarizes the year 2020 Without-Specific Plan and With- Specific Plan AM and PM peak hour operations on the Freeway Ramp intersections. Detailed HCM LOS analysis sheets are contained in the Technical Appendix of the TIS (**Appendix F**). All Caltrans' intersections operate acceptably, at LOS D or better, with an exception of the intersection of Santa Anita Avenue and I-10 Westbound Ramps, which operates at LOS F during the PM peak-hour periods under both Without-Specific Plan and With-Specific Plan traffic conditions, and the intersection of Santa Anita Avenue and I-10 Eastbound Ramps, which operates at LOS E during the AM peak-hour periods under Without-Specific Plan conditions and at LOS F under With-Specific Plan traffic conditions, and at LOS F during the PM peak-hour periods under With- Specific Plan traffic conditions.

Traffic volumes at the study intersections for 2035 was developed from projected 2020 volumes using a growth factor of 0.52 percent per year between 2020 and 2035, consistent with traffic growth projection factors established by Los Angeles County Congestion Management Plan for the study area. Volumes from related projects were added to the projected 2035 volumes to develop 2035 volumes Without-Specific Plan conditions. Similarly, Specific Plan-related traffic volumes were added to the 2035 Without- Specific Plan volumes to develop 2035 With-Specific Plan volumes.

Table 3.13-11 summarizes the Year 2035 Without- and With-Specific Plan AM and PM peak hour operation of the Freeway Ramp intersections. Detailed HCM LOS analysis sheets are contained in the Technical Appendix of the TIS (**Appendix F**). **Figure 3.13-8** shows 2035 traffic volumes Without-Specific Plan and With-Specific Plan conditions at the study intersections for the AM and PM peak hours.

All Caltrans' intersections operate acceptably, at LOS D or better, with an exception of the intersection of Santa Anita Avenue and I-10 Westbound Ramps, which operates at LOS F during the PM peak-hour periods under both Without- and With-Specific Plan traffic conditions, and the intersection of Santa Anita Avenue and I-10 Eastbound Ramps, which operates at LOS F during both the AM and PM peak-hour periods under both Without- and With-Specific Plan traffic conditions.

However, improvements have been identified to achieve City of El Monte's minimum LOS standards as both these intersections are impacted under future conditions per City of El Monte thresholds of significance.

Mitigation Measure

No mitigation measures are required beyond those identified for Impact T-1.

Significance After Mitigation

The residual impact following implementation of the recommended Mitigation Measures for Impact T-1 would remain less than significant.

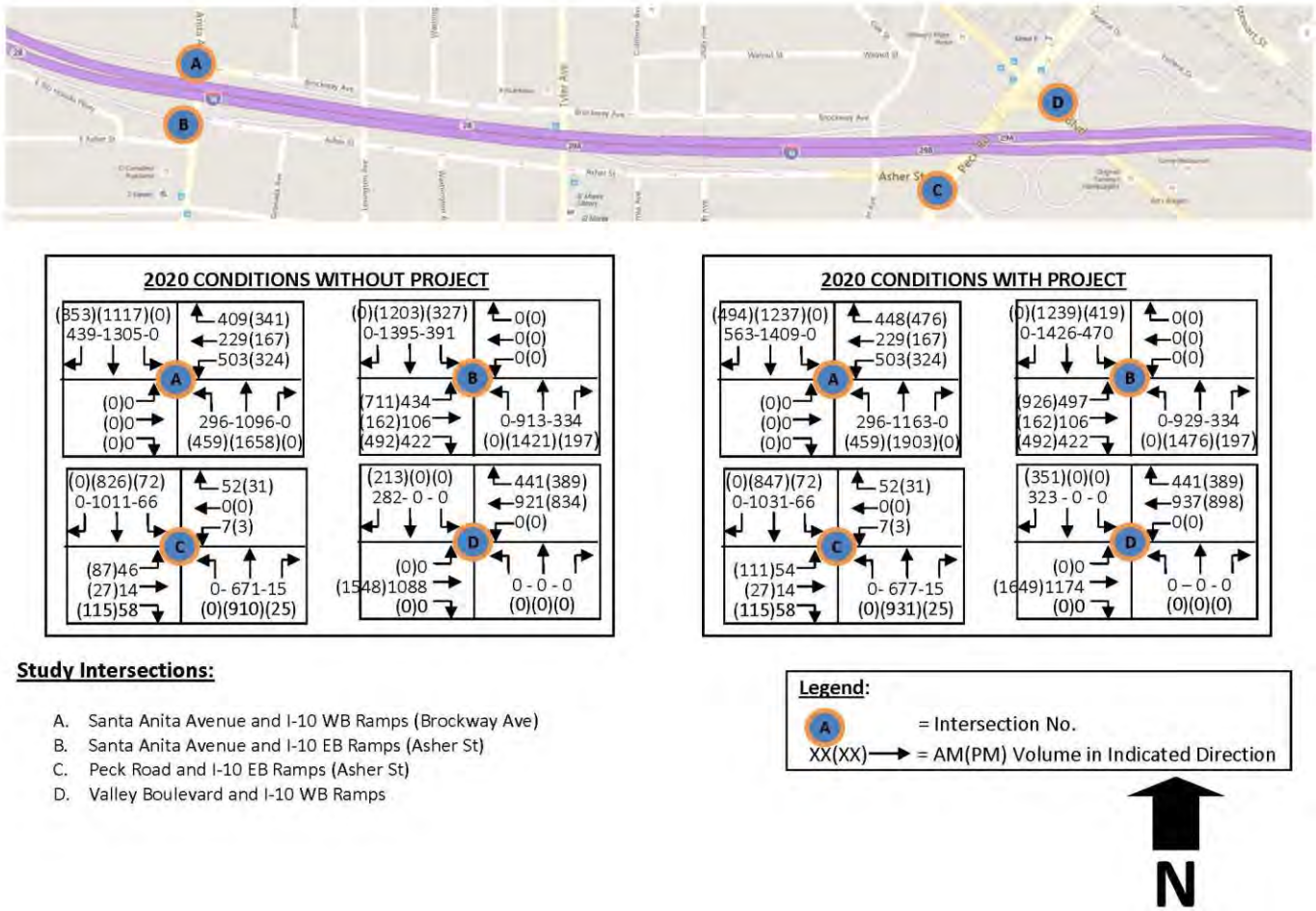

City of El Monte Downtown Main Street Transit-Oriented Development, Specific Plan Draft EIR	Figure 3.13-7 Traffic Volumes at Caltrans Intersections 2020 Conditions

Table 3.13-10: 2020 Intersection Level of Service at Freeway Ramp Intersections (With and Without Specific Plan)

		Future 2020 Traffic Conditions				
		Without Specific Plan		With Specific Plan		
Intersection	Peak Hour	LOS	Delay, Sec.	LOS	Delay, Sec.	Significant Impact Yes/No
A. Santa Anita Ave./ 1-10 WB Ramps	AM	D	41.6	D	44.1	NO
(Brockway Ave.) -Signalized	PM	F	126.7	F	163.4	YES
B. Santa Anita Ave./ I-10 EB Ramps (Asher	AM	E	65.7	F	106.4	YES
St.) - Signalized	PM	D	54.8	F	108.7	YES
C. Peck Road/I-10 EB Ramps (Asher St.) -	AM	C	601	C	8.2	NO
Unsignalized	PM	C	23.8	D	40.6	NO
D. Valley Blvd./I-10 WB Ramps -	AM	B	5.4	C	9.0	NO
Unsignalized	PM	B	1.8	C	8.6	NO

Source: Traffic Impact Study by Evan Brook Associates, December 2016

Table 3.13-11: 2035 Intersection Level of Service at Freeway Ramp Intersections (With and Without Specific Plan)

		Future 2035 Traffic Conditions				
		Without Specific Plan		With Specific Plan		
Intersection	Peak Hour	LOS	Delay, Sec.	LOS	Delay, Sec.	Significant Impact Yes/No
A. Santa Anita Ave./ 1-10 WB Ramps	AM	D	50.2	D	44.1	NO
(Brockway Ave.) -Signalized	PM	F	126.7	F	163.4	YES
B. Santa Anita Ave./ I-10 EB Ramps (Asher	AM	E	65.7	F	106.4	YES
St.) - Signalized	PM	D	54.8	F	108.7	YES
C. Peck Road/I-10 EB Ramps (Asher St.) -	AM	C	601	C	8.2	NO
Unsignalized	PM	C	23.8	D	40.6	NO
D. Valley Blvd./I-10 WB Ramps -	AM	B	5.4	C	9.0	NO
Unsignalized	PM	B	1.8	C	8.6	NO

Source: Traffic Impact Study by Evan Brook Associates, December 2016

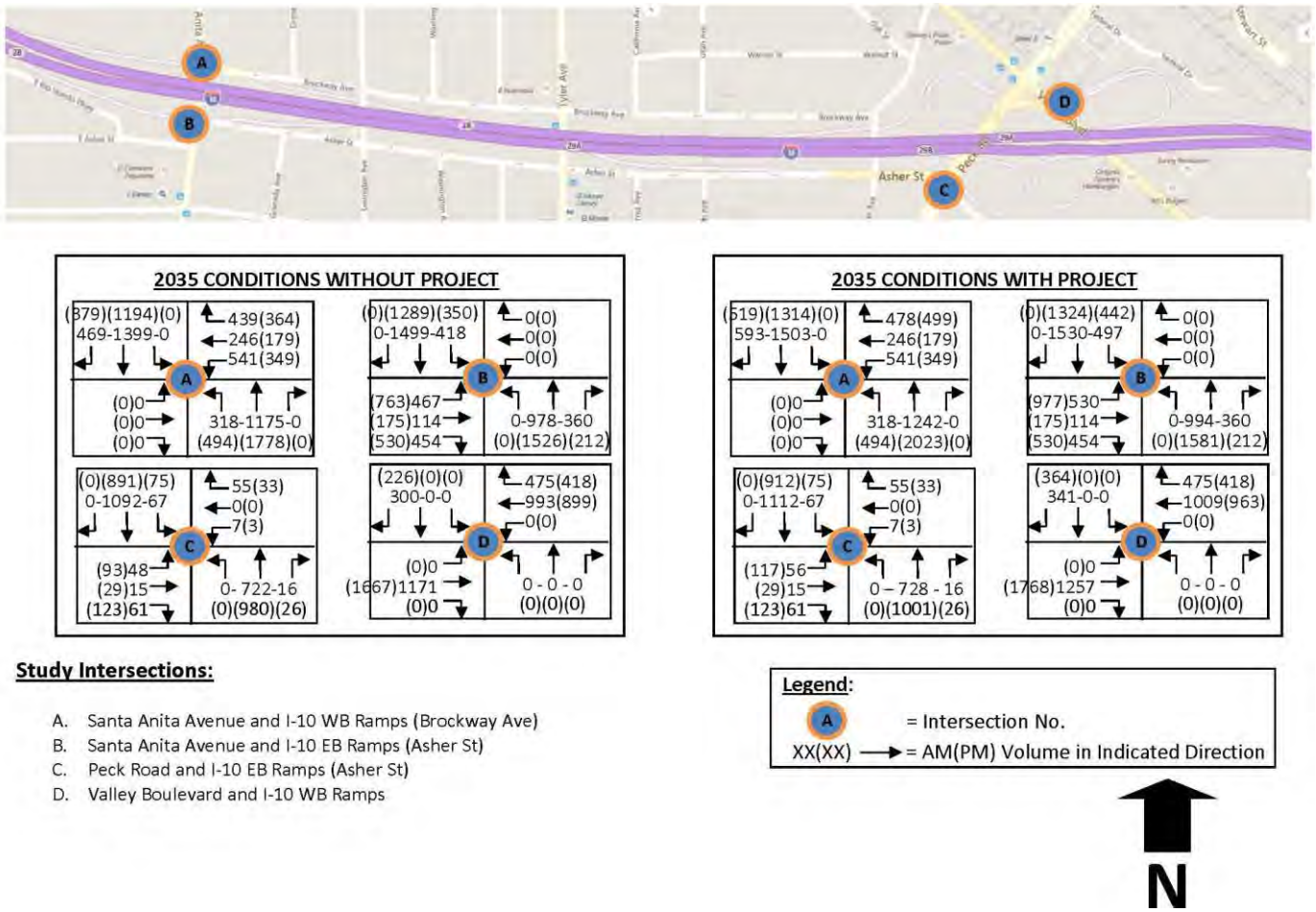

City of El Monte Downtown Main Street Transit-Oriented Development, Specific Plan Draft EIR	**Figure 3.13-8 Traffic Volumes at Caltrans Intersections 2035 Conditions**

Impact T-4

Impact T-4 The Specific Plan will contribute no additional trips at any other on- or off-ramps in the study area. There are no Specific Plan-related impacts on Caltrans' off-ramps.

Ramp Queuing Analysis. Per Caltrans' *Guide to Preparation of Traffic Impact Studies*, December 2002, a project causes a significant impact at a State Highway ramp if it adds at least 10 weekday peak hour trips when the ramp is operating at a deficient level of service (i.e., queuing exceeds storage capacity). This threshold was used for the analysis of potential impacts at on- and off-ramps that would be used by the Project traffic.

Freeway Off-Ramp Queuing. The Specific Plan is expected to add peak hour trips at the following I-10 freeway off-ramps in the study area:

- I-10 Westbound Off-Ramp at Brockway Avenue/Santa Anita Avenue: 39 AM peak hour trips, and 135 PM peak-hour trips.
- I-10 Eastbound Off-Ramp at Asher Street/Santa Anita Avenue: 63 AM morning peak-hour trips and 214 evening peak-hour trips.
- I-10 Eastbound Off-Ramp at Asher Street/Peck Road: 8 AM peak-hour trips, and 24 PM peak-hour trips.
- I-10 Eastbound Off-Ramp at Peck Road: 10 AM peak-hour trips, and 32 PM peak hour trips
- I-10 Westbound Off-Ramp at Valley Boulevard: 41 AM peak-hour trips, and 138 PM peak-hour trips.

The Specific Plan will contribute no additional trips at any other off-ramps in the study area. Therefore, no other off-ramps are included in this analysis. Off-ramp storage was obtained from aerial photographs and verified in the field. Observations were made at the five study off-ramps where the Project will add traffic to verify existing operations during morning and evening peak hours at all three ramps. No back-ups onto I-10 were observed at these 5 off-ramps during either the weekday AM or PM peak hour periods and ramp storage length adequately accommodated ramp queues at each location.

The Specific Plan does not add traffic to any ramps which are deficient. Therefore, there are no Specific Plan-related impacts on Caltrans' off-ramps.

Freeway On-Ramp Queuing. The Project is expected to add peak hour trips at the following I-10 freeway on-ramps in the study area:

- I-10 Westbound On-Ramp from Brockway Avenue/Santa Anita Avenue: 124 AM peak-hour trips, and 141 PM peak-hour trips.
- I-10 Eastbound On-Ramp from Asher Street/Santa Anita Avenue: 79 AM peak hour trips, and 92 PM peak-hour trips.
- I-10 Westbound On-Ramp from Peck Road: 31 AM peak hour trips, and 34 PM peak-hour trips.
- I-10 Eastbound On-Ramp from Valley Boulevard: 62 AM peak hour trips, and 71 PM peak-hour trips.

The Specific Plan will contribute no additional trips at any other on-ramps in the study area. Therefore, no other on-ramps are included in this analysis. On-ramp storage was obtained from aerial maps, and verified in the field. Observations were made at the 4 study on-ramps during AM and PM peak-hours to determine whether the vehicle queues exceeded the storage capacity of the on- ramps.

Each of the study on-ramps was subject to a ramp metering which disperses vehicles entering the freeway mainline gradually rather than in a group. The ramp meter typically turns green to release a vehicle with a frequency between 4 and 6 seconds. During actual operations, the frequency of the ramp meter is dynamic and subject to loop detectors in the mainline freeway measuring roadway speeds and congestion. If a ramp meter operates with a 5-second frequency consistently for one hour, then a maximum of 720 vehicles can enter the freeway from the metered lane.

Table 3.13-12 provides all collected data for the four study on-ramps and a summary of Specific Plan's impacts at the on-ramps. On-ramp storage capacity was not exceeded at the study on-ramps during the peak hours, and therefore, impacts on the on-ramps are not significant.

Table 3.13-12: Impacts on Freeway On-Ramps

Intersection	Peak Hour	Project Trips	Impact Threshold	Storage Length Ft.	Storage Length Greater than Observed Queue YES/NO	Significant Impact YES/NO
I-10 WB ON-Ramp from Brockway Ave./Santa Anita Ave.	AM	124	10	560	YES	NO
	PM	141	10		YES	NO
I-10 EB On-Ramp from Asher St./Santa Anita Ave.	AM	79	10	615	YES	NO
	PM	92	10		YES	NO
I-10 WB On-Ramp from Peck Road	AM	31	10	640	YES	NO
	PM	34	10		YES	NO
I-10 EB On-Ramp from Valley Blvd.	AM	62	10	590	YES	NO
	PM	71	10		YES	NO

Source: Traffic Impact Study by Evan Brook Associates, December 2016

Mitigation Measure

No mitigation is required.

Significance After Mitigation

There are no impacts and no mitigation measures are required.

Impact T-5

Impact T-5	The Specific Plan will add more than 50 peak-hour trips to most freeway segment. However, the threshold of impact as defined by Caltrans will not be exceeded.

The following eight freeway segments of I-10 Freeway in the study area (from west of I-10 eastbound Off-Ramp to Santa Anita Avenue, to east of I-10 westbound Off-Ramp to Valley Boulevard West) were analyzed:

- W/O EB Off-Ramp to Santa Anita
- Santa Anita Off to Santa Anita On
- Santa Anita EB On to SB Peck Off
- EB Off (Peck SB) to EB Off (Peck NB)
- Peck NB Off to Valley EB On
- Valley WB On to Valley EB On
- Valley EB on to Valley WB Off
- E/O WB Off-Ramp to Valley WB

Table 3.13-13 shows the number of AM and PM peak-hour trips that will be added from the Specific Plan to the freeway segments studied in the area. The Specific Plan will add more than 50 peak-hour trips to most freeway segment. However, the threshold of impact as defined by Caltrans will not be exceeded (i.e. the project trips will not cause an existing acceptable LOS C or D operation on any segment to worsen to a deficient LOS E or F). Therefore, there will be no Specific Plan-related impacts on any freeway segments in the study area.

Mitigation Measure

No mitigation is required.

Impact After Mitigation

There are no impacts and no mitigation measures are required.

Table 3.13-13: Caltrans Mainline Levels of Service and Specific Plan-Related Impacts

			AM Peak Hour						PM Peak Hour					
			2014		2016		Project Trips		2014		2016		Project Trips	
I-10 Segment	Dir.	No. of Lanes	Vol. (veh/hr.)	Flow Rate pc/hr/ln	Density	LOS	Vol. (veh/hr)	Impact YES/NO	Vol. (Veh/Hr.)	Flow Rate pc/hr/ln	Density	LOS	Vol. (Veh/Hr.)	Impact YES/NO
W/O EB Off-Ramp on Santa Anita	EB	5	6.005	1,305	22	C	81	NO	7,783	1,691	28	D	270	NO
	WB	5	9,023	1,960	34	D	155	NO	5,698	1,238	21	C	175	NO
Santa Anita Off to Santa Anita On	EB	5	5,416	1,177	19	C	30	NO	7,019	1,525	24	C	34	NO
	WB	5	8,138	1,768	30	D	31	NO	5,139	1,117	16	B	34	NO
Santa Anita EB On to SB Peck Off	EB	5	5,924	1,287	22	C	97	NO	7,677	1,668	27	D	150	NO
	WB	5	8,900	1,934	33	D	70	NO	5,621	1,221	21	C	169	NO
EB Off (Peck SB) to EB Off (Peck NB)	EB	5	5,638	1,225	21	C	89	NO	7,307	1,588	26	C	124	NO
	WB	5	8,472	1,841	32	D	39	NO	5,350	1,162	17	B	135	NO
Peck NB Off to Valley EB On	EB	5	5,690	1,236	21	C	79	NO	7,374	1,602	26	C	92	NO
	WB	5	8,549	1,857	32	D	39	NO	5,399	1,173	17	B	135	NO
Valley WB On to Valley EB On	EB	5	5,557	1,207	20	C	141	NO	7,202	1,565	25	C	163	NO
	WB	5	8,349	1,814	32	D	39	NO	5,273	1,146	17	B	135	NO
Valley EB On to Valley WB Off	EB	5	5,665	1,231	21	C	141	NO	7,342	1,595	26	C	163	NO
	WB	5	8,512	1,849	32	D	39	NO	5,376	1,168	17	B	135	NO
E/O WB Off-Ramp to Valley WB	EB	5	5,733	1,246	21	C	141	NO	7,430	1,614	26	C	163	NO
	WB	5	8,615	1,872	32	D	80	NO	5,441	1,182	18	B	273	NO

Source: Traffic Impact Study by Evan Brook Associates, December 2016

Impact T-6

Impact T-6 The Specific Plan will provide adequate on-site parking based on Sub-Area parking standards in the Specific Plan. Parking impacts are considered less than significant.

The implementation of the Specific Plan will adequately provide on-site parking to satisfy parking needs for various land uses. Parking will be provided with either on surface parking lots or parking structures for each development project within the Plan Area by the year 2035. Based on Sub-Area parking standards which include the number of parking spaces per residential uses (units) or non-residential uses (square feet). For example, in the Main Street Sub-Area, retail use require 1.5 spaces per 1,000 square feet and a one bedroom unit requires one space per unit. For uses which have peak parking demands during different hours of the day (e.g., residential, retail, office, entertainment, etc.) the methodology of shared parking will be used to determine maximum number of parking spaces needed for the site under a shared parking agreement between the various uses. The site plan and internal circulation system for each development project, will be prepared to accommodate parking needs. The Specific Plan include parking ratios for land uses not specifically identified, such as the adequate number of ADA spaces, electric vehicle charging stations, and space dimensions shall be required to meet the parking standards of Chapter 17.08.090-Parking Requirements of the Municipal Code.

Mitigation Measure

No mitigation measures are required

Significance After Mitigation

There are no impacts and no mitigation measures are required.

Impact T-7

Impact T-7 Implementation of the General Plan policies and the Specific Plan guiding principles supporting alternative mode of transportation will encourage transit use, walking, and bicycling instead of automobiles as a way of mobility to and from the Plan Area and within the Plan Area. Impacts related to alternative transportation is considered less than significant impact.

The current El Monte General Plan includes numerous goals and policies that encourage alternative modes of transportation in the City. As previously presented in section B. Regulatory Framework, the policies for the following goals

- **Goal C-3.** A well-managed traffic management system that maximizes the operational efficiency of existing roadways, encourages a balance of transportation modes, and improves the safety and livability of neighborhoods.

- **Goal C-4.** A local and regional transit service that is accessible and safe; connects to homes, residences, parks, and other community destinations; and provides a viable alternative to the use of autos.
- **Goal C-5.** A connected, balanced, and integrated system of walking, biking, and equestrian paths and trails that is accessible and safe and connect to homes, residences, parks, and other community destinations.
- **Goal C-6.** Integration of circulation and land use development policies and practices that support walking, bicycling, and use of transit through a variety of supportive land use development and urban design measures.

The Specific Plan's guiding principles supporting alternative transportation include:

- **Mixed-Use, Pedestrian and Transit Oriented.** Create a mixed-use, pedestrian- and transit-oriented urban village focused around a pedestrian-friendly Main Street that is woven together by attractive streetscape improvements and paseos.
- **Expanded and Improved Transit.** Create a Downtown supported by an expanded and improved public transit system.
- **Public Enhancements.** Provide a safe, active, and livable urban atmosphere with distinct streetscape design connected by public plazas, promenades, and paseos. Create entryways at key intersections, and improve streetscapes and signage.
- **Multimodal Streets.** Provide a well-connected and balanced system of multimode streets (bus, auto, and bike) connected to pedestrian linkages that are designed to accommodate all users regardless of age or ability.

The Specific Plan's Mobility and Beautification Plan also includes proposed transit, pedestrian, and bicycle network improvements, such as, but not limited to the following:

- Incorporate pedestrian safety crossing enhancements at the intersections of Valley Boulevard and El Monte Avenue, Tyler Avenue and the Metrolink railroad line, and Lexington Avenue and Ramona Boulevard.
- Pedestrian safety crossing enhancements should include stamped and/or highly visible crosswalks, flashing pedestrian crossing signage, pedestrian lights, and a vehicular stop line setback from the crossing.
- Incorporate pedestrian/bicycle priority crossings at the intersections of Santa Anita Avenue and Main Street, Santa Anita Avenue and Ramona Boulevard, Ramona Boulevard and Tyler Avenue, Tyler Avenue and Main Street, Valley Boulevard and Center Avenue, and the five-way intersection at Valley Boulevard, Main Street, and Ramona Boulevard.
- Pedestrian/bicycle priority crossings should include stamped and/or highly visible crosswalks and a vehicular stop line setback from the crossing.
- El Monte Avenue should be transformed into pedestrian focused promenades linking the Metrolink Station to the Downtown core. The existing pedestrian paseo near El Monte Avenue, south of Main Street, should be enhanced with pedestrian amenities.
- Bicycle facility improvements within the Specific Plan area should include the following:
- Class II (Striped) on Valley Boulevard, Tyler Avenue north of Ramona Boulevard, and portions of Ramona Boulevard
- Class II (Buffered) on Santa Anita Avenue north of Valley Boulevard.

- Class III with vv (shared lane) stencil markings on designated roads.
- Class III Bike Boulevards on El Monte Avenue, Main Street, and Lexington Avenue. Bike Boulevards should be optimized for bicycle travel using traffic calming and reduction, signage and pavement markings, and intersection crossing treatments.
- Pedestrian/Bicycle Portal enhancements including additional signage, lighting, and pavement markings.
- Bicycle Hub program, currently located at the El Monte Station, should be replicated to the El Monte Metrolink Station.

Mitigation Measure

No mitigation is required.

Significance After Mitigation

There are no impacts and no mitigation measures are required.

E. Cumulative Impacts

The Traffic Impact Study prepared for this Specific Plan incorporated the related-projects lists included in Appendix B. The results of the traffic impacts are presented in Impact T-1 which show a total of 5 intersections analyzed would have significant traffic impact under cumulative traffic conditions. The cumulative traffic includes ambient traffic growth, traffic estimated to be generated from the TOD project as well as estimated traffic to be generated from a total of 59 related projects (currently in various stages of planning and construction) in and around this project. The impacts determined for cumulative traffic conditions represent impacts under a worst-case scenario for traffic impact analysis purposes. However, mitigation measures have been identified to reduce cumulative impacts to a level of insignificance.

3.14 Utilities and Service Systems

The Utilities and Service Systems chapter of the EIR discusses the potential environmental impacts on existing water and wastewater systems that could result from implementation of the proposed Specific Plan. There was no discussion of solid waste in this section. I assume that is because it was dismissed in the Initial Study. If so, please provide a short discussion of this fact here.

Water Supply

A. Setting

The City of El Monte's water supply is primarily groundwater, extracted by production wells from the Main San Gabriel Groundwater Basin. There are nine water districts that serve the City of El Monte (the "City"), with the three major water suppliers being the City of El Monte Water Department, San Gabriel Valley Water Company (SGVWC), and California American Water (Cal-Am). **Figure 3.14-1** shows the various water districts and the location of water wells.

Water supply for the Plan Area is provided by the City of El Monte Water Department, which currently owns and operates the water system in the area. The City operates six production wells throughout El Monte, including two within the Plan Area, to extract water from the Main San Gabriel Groundwater Basin.

According to the 2010 Urban Water Management Plan for the City of El Monte[1], the City Water Department does not import water nor is it connected to a transmission pipeline of any water wholesaler. The water supply from the six deep wells have a total capacity of about 9,500 gallons per minute (gpm) or about 14,000 acre-feet per year. In addition, the system utilizes a 200,000-gallon elevated tank and a one million-gallon ground level tank that serves the water distribution system.

The City Water Department's system includes 3,460 active services, which supply 18 percent of El Monte's total land area and approximately 22,700 of its residents. The historic water demand since 1995 has been about 889 million gallons per year. The City's water users include single family and multi-family residential, commercial, institutional, and irrigation. The City's single-family residential sector and commercial sector comprise the majority of the water users. The single-family sector uses about 41 percent of the City's water demand and the commercial sector uses about 32 percent of the City's water demand. The remainder of the El Monte's water demand includes: multi-family residential sector (16%), industrial sector (8%) and irrigation (3%).

[1] *The 2015 Urban Water Management Plan for the City of El Monte is anticipated to be adopted in late 2016 or early 2017.*

In 2010, there was a surplus of water relative to demand in the City. As presented in **Table 3.14-1,** the 2010 total water supply for the City totaled 4,839 acre feet per year (AFY) while water demand was 2,349 AFY. By 2035, the City's water supply is projected to increase to 8,024 AFY, while demand is projected at 2,639 AFY.

Table 3.14-1: City of El Monte Water Demand and Supply - Multiple Dry Water Years (Acre Feet/Year, AFY)

	2010 (Actual)	2015	2020	2025	2030	2035
Water Demand[a]	2,349	2,535	2,561	2,586	2,612	2,639
Water Supply Sources						
Local Groundwater[b]	2,142	2,313	2,336	2,359	2,383	2,407
Carryover	2,697	972	2,354	3,589	4,677	5,617
Total Water Supply	**4,839**	**3,285**	**4,690**	**5,948**	**7,060**	**8,024**

Source: City of El Monte Urban Water Management Plan, 2010
[a] 17% reduction in demand based on a Stage III Water Alert
[b] 20% reduction in the OSY set by the Main San Gabriel Basin Watermaster is assumed in a single dry year

The City of El Monte holds water rights to roughly 1.4 percent of the Operating Safe Yield (OSY) of the Main San Gabriel Valley Groundwater Basin (Basin). The Operating Safe Yield, the amount that can be withdrawn without depleting the Basin, was established at 170,000 AFY in 2003–04; therefore, the City's water rights to Basin water that year were approximately 2,395 AFY.

The City's potable water is delivered through 40 miles of pipelines, reservoirs, booster pumps, water wells, disinfection facilities, carbon filters, and emergency connections with neighboring water purveyors. Water distribution within the Plan Area consists of water lines ranging from 2 to 12-inch diameter pipes that are located under the majority of streets. **Figure 3.14-2** illustrates the water distribution system within the Plan Area. Based on the City Water Department's 2014 Water Quality Report, the water quality meets or surpasses all Federal and State drinking water standards.

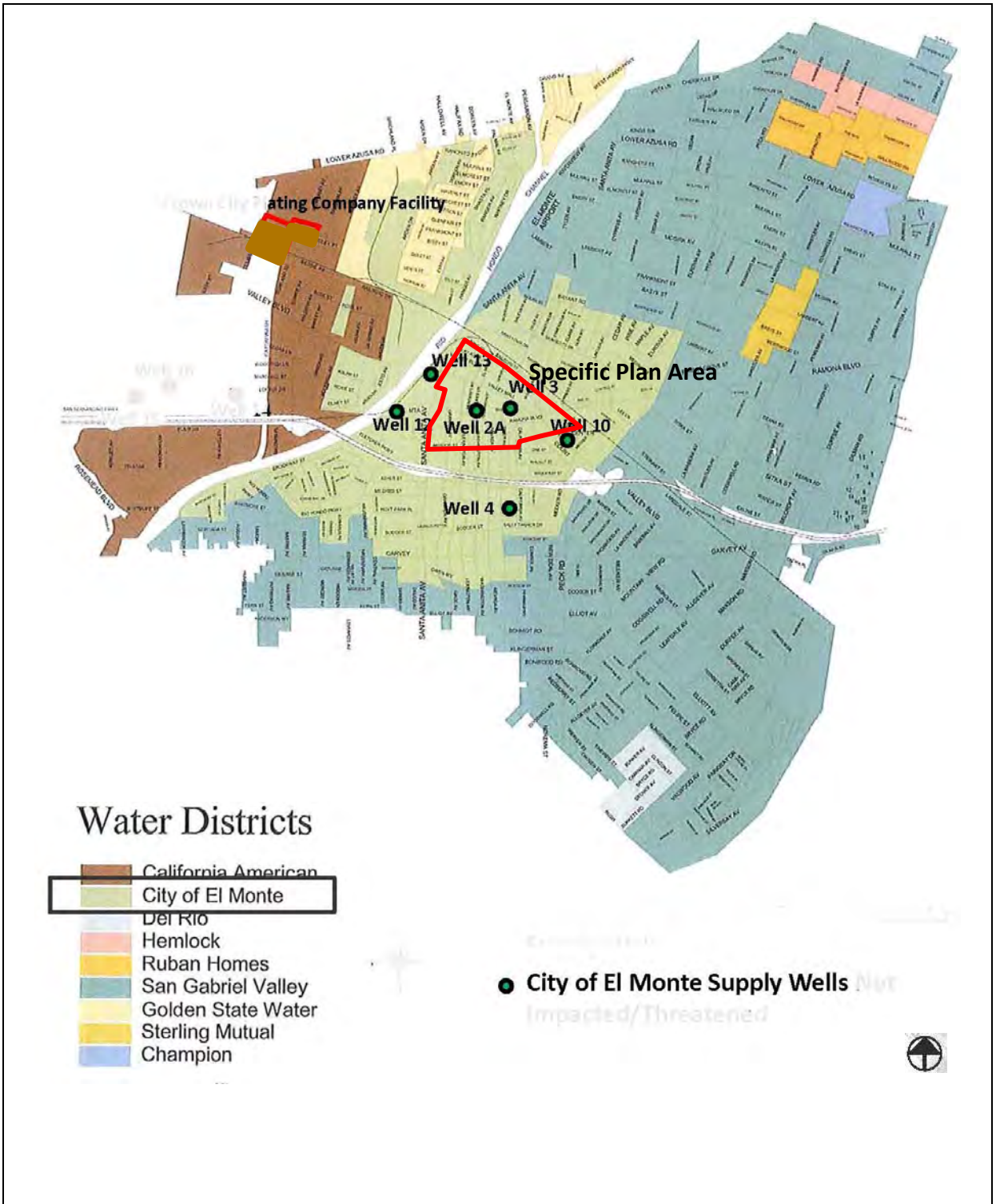

Downtown Main Street Transit-Oriented Development, Specific Plan Draft EIR	**Figure 3.14-1 Water Districts and Wells**

B. Regulatory Framework

Federal

Federal Safe Drinking Water Act. The Safe Drinking Water Act authorizes the US Environmental Protection Agency (EPA) to set national standards for drinking water (National Primary Drinking Water Regulations). These regulations work to protect against naturally occurring and human-made contaminants in water supply. The Act sets enforceable maximum contaminant levels in drinking water and requires all water providers to treat water to remove any contaminants. If a water system does not meet standards, the water supplier is required to notify customers. In California, the State Department of Health Services is largely responsible for overseeing enforcement of these standards.

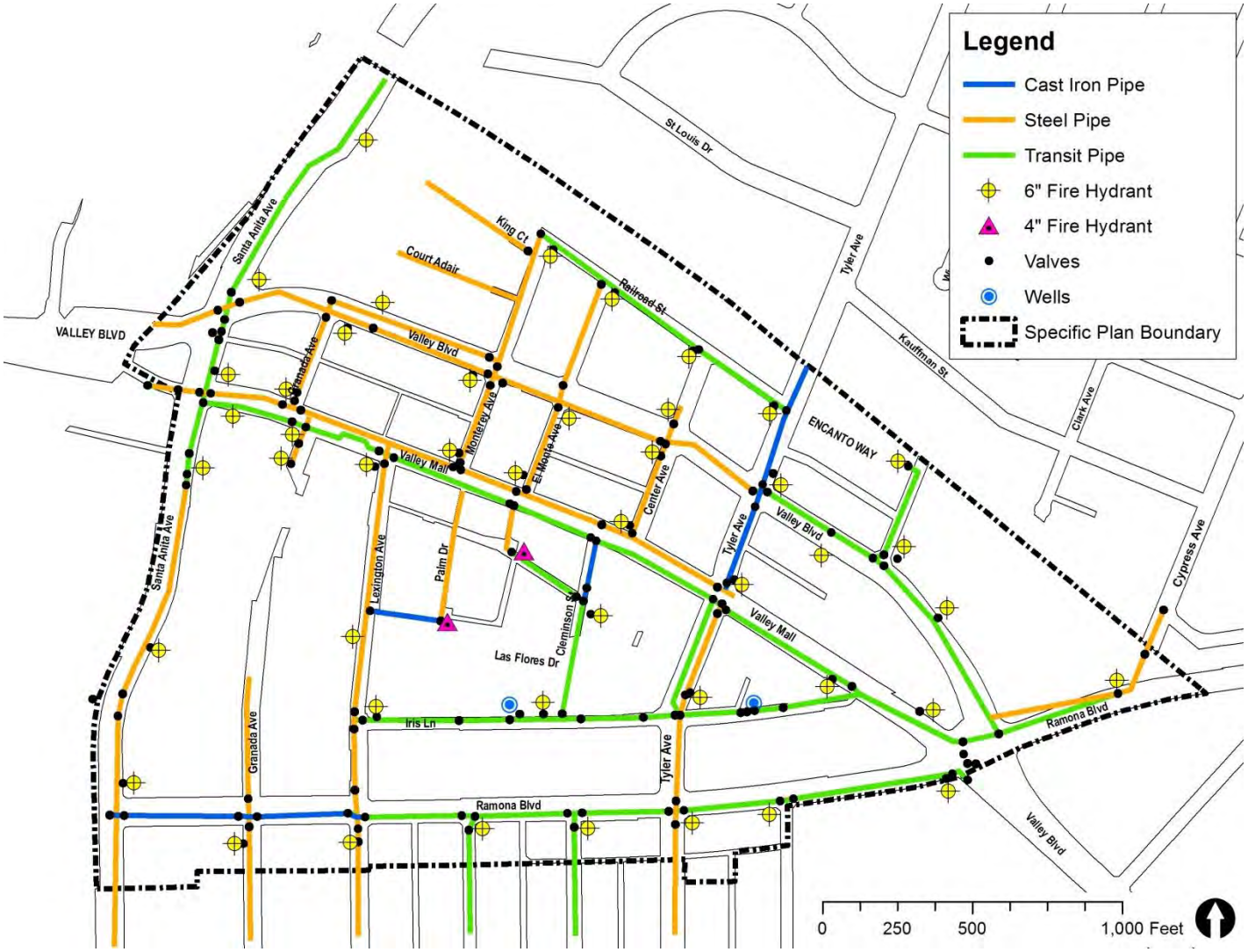

Downtown Main Street Transit-Oriented Development, Specific Plan Draft EIR | **Figure 3.14-2 Water Distribution System**

State

California Water Code. The California Water Code requires that urban water suppliers (of a certain size, i.e., number of connections) provide an Urban Water Management Plan (UWMP) to the Department of Water Resources, the California State Library, and any municipality to which the supplier provides water.

Senate Bill 610 and 221. SB 610 and SB 221 are companion measures that amended state law in 2002 to improve the connection between water supply availability and land use decisions made by local jurisdictions and improve collaborative planning between suppliers and cities or counties. The measures are targeted towards proposed large development projects, to better ensure water availability prior to approval by keeping detailed information on record to support decision making. Compliance with both SB 610 and SB 221 is laid out through preparation of an UWMP. Both of these statutes identify the UWMP as a planning document that can be used by a water supplier to meet the standards set forth in both bills.[2]

Water Conservation Act of 2009 (Senate Bill x7-7). SBx7-7 amended the State Water Code to require of all urban retail water suppliers subject to the Urban Water Management Planning Act a 20 percent reduction in urban water use per capita by December 1, 2020 ("20x2020 policy"). The new policy requires suppliers to develop specific water use reduction targets, compliance to which is linked to state water grants. Suppliers are also permitted to meet compliance by forming regional alliances.

Sustainable Groundwater Management Act of 2014. The Sustainable Groundwater Management Act (SGMA) of 2014 was signed into law by Governor Jerry Brown to provide a legislative framework for sustainable groundwater management by local jurisdictions. Under the Act, local groundwater agencies (GSAs) are formed to evaluate condition in their local water basins for the purpose of adopting local management plans. The Act provides a 20-year span for implementing these plans without requiring changes to existing surface and groundwater rights[3].

Governor Jerry Brown Executive Order B-29-15: On April 1, 2015, Governor Jerry Brown passed an executive order declaring a State of Emergency in the state due to prevailing drought conditions. The Order calls on the State Water Resources Board to impose a 25 percent reduction in potable water use through February 28, 2016. The reduction will be collectively imposed upon the state's 411 urban water districts combined.

[2] *http://www.water.ca.gov/pubs/use/sb_610_sb_221_guidebook/guidebook.pdf*
[3] *http://www.acwa.com/content/groundwater/groundwater-sustainability*

Local

City of El Monte General Plan. Applicable El Monte General Plan policies include:

Public Service and Facilities Element, Goal PSF-3. High quality service levels for waste management, stormwater, wastewater, and water production in El Monte, sufficient to serve current and future residents, visitors, and the business community.

PSF-3.5 Green Infrastructure. Investigate and pursue, wherever feasible, the use of trees, swales, and other green infrastructure to help conserve water and replenish the aquifer.

PSF-3.6 Water Provision. Continue to provide sufficient quantity of municipal water service that meets or exceeds state and federal health standards for drinking water.

PSF-3.7 Water Conservation. Require the incorporation of best management practices, where feasible, to conserve water in public landscaping, private development projects, and public agencies.

PSF-3.8 Investment in Facilities. Ensure that adequate investments continue to be made in repairing, rehabilitating, and upgrading City infrastructure to serve current and future customers.

Public Services and Facilities Element, Goal PSF-4. Well-managed network of infrastructure evidenced by rigorous capital improvement planning, preventive maintenance, and equitable financing.

PSF-4.1 Resources. Provide resources for technology (e.g., computerized tracking systems), staffing, and other tools necessary to automate and modernize the process of maintaining, monitoring, and protecting the City's investment in its infrastructure.

PSF-4.2 Master Plans. Prepare comprehensive master plans for all major infrastructure (e.g., roads, water, sewer, and public facilities) and ensure that findings are explicitly tied into capital improvement plans, the annual budgeting process, and the City's Vision.

PSF-4.3 Fair Share. Require development to pay the full cost of improving water, wastewater, road, parks, or other infrastructure necessitated by their projects, unless findings are made that the fair share requirement should be waived due to overriding public benefit.

PSF-4.5 Benefit Assessments. Require the formation of benefit, maintenance, or community facilities districts for large projects, specific plan areas, or neighborhood areas that desire or require additional maintenance, facilities, or levels of service.

PSF-4.6 Financial Reserves. Adopt a reserve policy that allows for the full recapitalization of infrastructure in compliance with guidelines of the Government Officers Finance Association and accepted industry norms for the replacement of infrastructure components.

PSF-4.7 Specific Plans. Require that specific plans contain comprehensive infrastructure master plans that detail infrastructure conditions and needs; prepare a financing plan to fund improvements and a cost-sharing arrangement for property owners to pay for infrastructure.

The City adopted Resolution No. 7045 in 1990, requiring voluntary water conservation practices, and in 2009 the City adopted Ordinance No. 2738, which established a five-stage rationing plan including up to 50 percent reduction in water supply if the City experiences a water supply shortage. Also, in June 2016, the City adopted Ordinance No. 2884 which amended Chapter 17.11 (Water Efficiency) of the El

Monte Municipal Code to reflect the updated Model Water Efficient Landscape Ordinance (MWELO) from the California Department of Water Resources. This Ordinance establishes a structure for planning, designing, installing, maintaining and managing water efficient landscapes in new construction and rehabilitated projects by encouraging the use of watershed approach that requires cross-sector collaboration of industry, government and property owners to achieve the its many benefits.

Furthermore, the City requires that all new development projects within the City to submit a water system analysis to verify the necessary infrastructure improvements needed to serve the development. The general requirements for this analysis are verification of: 1) a minimum of 40 pounds per square inch (psi) delivered during peak hour demand (PHD); and 2) a minimum of 20 psi delivered during maximum day demand (MDD) plus fire flow (FF).

C. Significance Thresholds

Implementation of the proposed Specific Plan would have a significant impact related to water supply if it would:

1. Have insufficient water supplies available to serve the project from existing entitlements and resource; or, if new or expanded entitlements are needed.
2. Require or result in the construction of new water treatment facilities or expansion of existing facilities, the construction of which could cause significant environmental effects.

Potential impacts associated with storm water drainage (significance criteria XVII-c), and solid waste disposal (significance criteria XVII-f and g), were found in the Initial Study (Appendix A) to be less that significant and are not analyzed in this EIR.

D. Impacts and Mitigation Measures

Impact U-1

Impact U-1	Development facilitated by the Specific Plan is estimated to increase water demand by 513,375 gallons per day. The City would be able to supply projected demand based on existing water entitlements. Therefore, impacts to water supply would be less than significant.

As described above and in Chapter 2, Project Description, buildout of the proposed Specific Plan is expected to result in a net increase of 2,200 residential dwelling units and a net increase of approximately 325,000 square feet of retail, 100,000 square feet of restaurants, and 75,000 square feet of offices for a total of 500,000 square feet of commercial building area by 2035. According to **Table 3.14-2** (Net

Water Demand), buildout of the Specific Plan in 2035 would increase demand for water by 513,375 gallons per day, or an equivalent of 575 acre feet per year (AFY)[4].

Table 3.14-2: Net Water Demand, Specific Plan Buildout

Land Use	Net Increase DUs or SF	Daily Water Demand (Gal./DU or Gal./SF)[a]	Water Demand (Gal/Day)
Dwelling Units	2,200	195[a]	429,000
Retail	325,000	0.125[b]	40,625
Restaurant	100,000	0.25[c]	25,000
Office	75,000	0.25[d]	18,750
Total			**513,375**

Source: City of El Monte General Plan and Zoning Code Update EIR, 2011
[a] *Residential assumes Downtown Core land use*
[b] *Retail assumes commercial Downtown Core land use.*
[c] *Restaurant assumes General Commercial land use*
[d] *Office assumes commercial Office and Professional Office Park land use*

The City's water supply is deemed stable through 2035. As presented in **Table 3.15-1**, water supply for the City is projected to increase from 3,285 AFY in 2015 to 8,024 AFY in 2035, an increase of 4,739 AFY. Water demand from Specific Plan buildout represents 12.1 percent of the increase in water supply between 2015 and 2035. Moreover, there are a number of federal, state, and local level measures to ensure that new development include the requisite water efficiency measures. Hence, the project's impact on water supply is considered less than significant.

Furthermore, to ensure impacts are less than significant, all new development within the Plan Area shall:

- Comply with the water conservation measure in the California Green Building Standards Code (Part 11 of Title 24, California Code of Regulations); and
- Implement water conservation Best Management Practices (BMP) identified in the Urban Water Management Plan.

Mitigation Measures

No mitigation is required.

Significance After Mitigation

No mitigation measure are required and impacts on water supply remain less than significant.

[4] *One acre feet per year is equivalent to 892.15 gallons per day*

Impact U-2

Impact U-2	The Plan Area includes areas of aging water pipes and facilities that require improvements; however, the Specific Plan identifies numerous infrastructure improvement projects and new development project requirements. Therefore, impacts on water infrastructure are considered less than significant.

The City Public Works Department has identified areas of aging water pipes and facilities that require improvements. The necessary improvements to the existing water system deficiencies are identified in the Specific Plan and listed below:

- Complete the installation of water meters (citywide)
- Construction of Well No. 3 and blend with Well No. 2A
- Water main replacement at 3500 block of Granada Avenue
- 10 and 12-inch water main replacement on Valley Boulevard from Santa Anita Avenue to Johnson Avenue
- 8-inch water main replacement in the Valley Mall east of Granada Avenue
- 10-inch water main replacement on Tyler Avenue from Brockway Street to Ramona Boulevard

In addition, the Specific Plan includes the following requirements:

- All new development projects to submit a water system analysis to verify the necessary infrastructure improvements needed to serve the project. The general requirements for this analysis include: 1) a minimum of 40 pounds per square inch (psi) delivered during peak hour demand (PHD); and 2) a minimum of 20 psi delivered during maximum day demand (MDD) plus fire flow (FF).
- All new development projects to comply with applicable fire and life safety standards and code requirements established by the Los Angeles County Fire Department, including, but not limited to, fire hydrant flow, hydrant spacing, and water supply connections, which must be adequately sized to the satisfaction of the County Fire Department.

With the identified water system improvements and requirements, the impact of connecting the land uses in the Plan Area to the existing water distribution system is considered to be *less than significant*.

Mitigation Measures

No mitigation is required.

Significance After Mitigation

No mitigation measure are required and impacts on water supply remain less than significant.

E. Cumulative Impacts

Implementation of the Specific Plan combined with the cumulative projects will increase water demand. However, the new water demand will accommodated by future water supply. In addition, the City has identified other water facility improvements in addition to those listed in Impact U-2 that will adequately accommodate future water needs. Furthermore, all new development projects must comply with the City's water system requirements. Cumulative impacts on water supply and system improvements are considered less than significant.

Wastewater

A. Setting

The City is one of 17 jurisdictions in the metropolitan Los Angeles area that are signatories to the Joint Outfall Agreement that provides a regional, interconnected system of facilities known as the Joint Outfall System (JOS). The Los Angeles County Sanitation District treat wastewater at the Whittier Narrows Water Reclamation Plant (WRP), located south of the City. It provides primary, secondary, and tertiary treatment for approximately 15 million gallons of wastewater per day (gpd). Tertiary-treated effluent, or "recycled water," is used for irrigation, industrial uses, and groundwater recharge for spreading basins along the San Gabriel River and Rio Hondo Channel. Sludge is placed back into the sewer system for conveyance to the Joint Water Pollution Control Plant (JWPCP) in Carson for further treatment prior to eventual disposal into the Pacific Ocean. The JWPCP has a design capacity of 400 million gallons per day (mgd) and currently processes an average daily flow (DWF) of 263.4 mgd[5]. The plant has a remaining capacity of about 100 mgd.

The sewer system within the Plan Area is owned, operated, and maintained by the City of El Monte Public Works Department, with the exception of a trunk main line at the western portion of the Plan Area that is owned and maintained by the Los Angeles County Sanitation District. The City's present wastewater system includes a total of 135 miles of pipeline, six pump stations, and 2,697 manholes. A limited number of residences are also on septic tanks. Within the Plan Area, there is a comprehensive network of sewer lines that includes mostly 8-inch Vitrified Clay Pipe (VCP). Sewer mains range in size from 10 to 15 inches. These existing sewer lines within the Plan Area are shown in **Figure 3.14-3**.

Currently, the City is updating its sewer master plan, which will include hydraulic modeling and camera inspection of sewer lines. The sewer master plan will assess the hydraulic capacity of the City's sewer system and prioritize capital improvement projects to address existing and projected future capacity requirements. The sewer master plan is scheduled for completion in late 2017.

[5] *Letter from County Sanitation Districts of Los Angeles County*

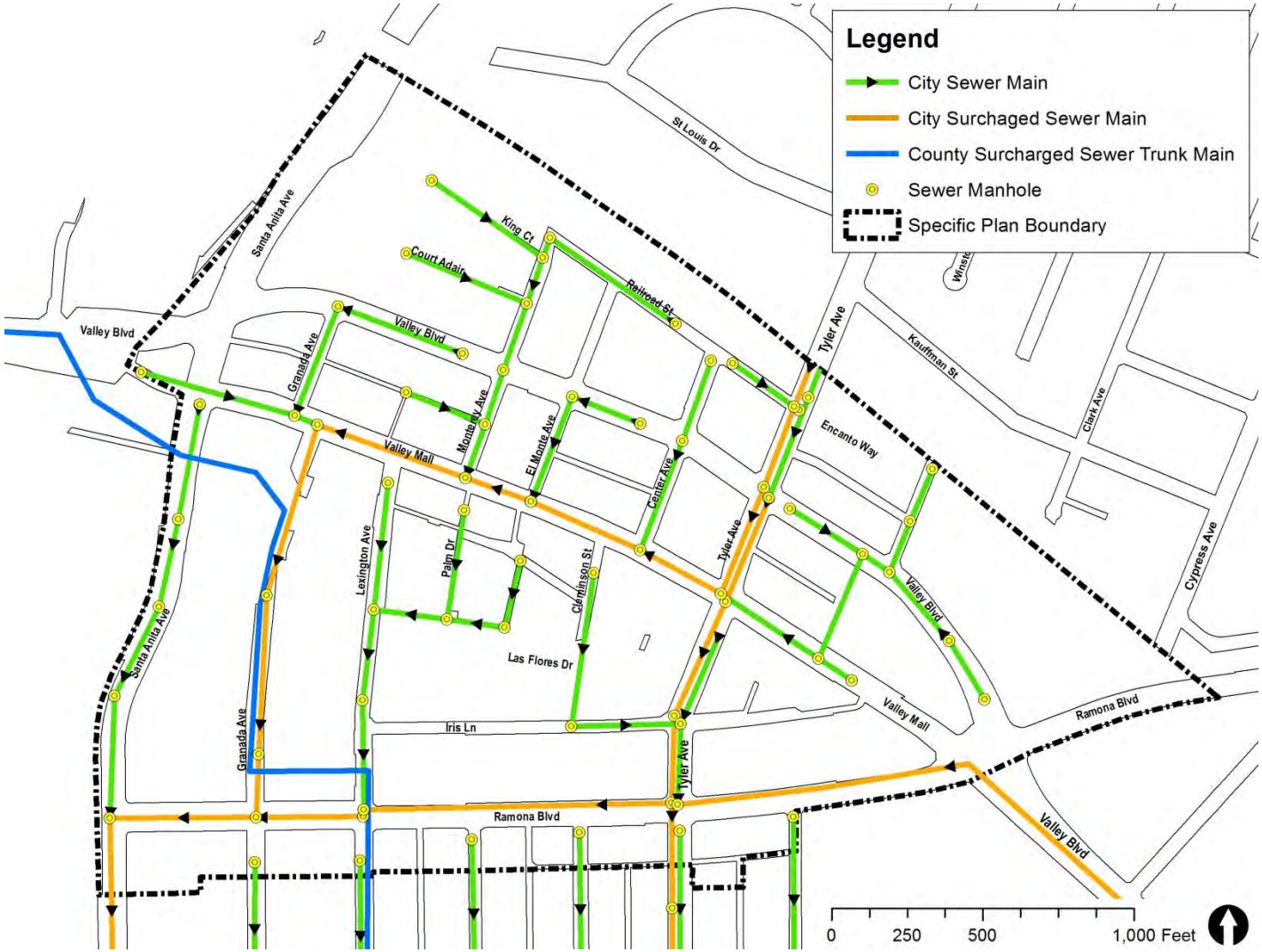

Downtown Main Street Transit-Oriented Development, Specific Plan Draft EIR | **Figure 3.14-3 Waste Water System**

B. Regulatory Framework

Federal

Federal Clean Water Act: The Clean Water Act of 1972 establishes basic regulations for discharging pollutants into watersheds throughout the United States. The Clean Water Act also provides for regulation of water quality standards and contaminants in surface water. The EPA oversees implementation of the Clean Water Act through pollution control programs and by setting said wastewater standards[6].

National Pollutant Discharge Elimination System (NPDES): The NPDES permit program (1972) regulates water pollution by monitoring point sources of discharge pollutants entering the waterways. Point sources typically include treated wastewater, process water, cooling water, and stormwater runoff from drainage systems. Permits are required for most industrial, municipal, andother types of facilities that discharge directly into surface waters. NPDES permits are not required for individual homes that connect to a municipal system, use a septic system, or do not otherwise generate surface discharge[7].

State

State Water Resources Control Board (SWRCB): The SWRCB and nine regional boards oversee water quality in the State as well as allocate surface water rights. The General Waste Discharge Requirement (WDR) was adopted in 2006 to provide a consistent statewide approach to regulating and reducing sanitary sewer overflows (SSOs) under Water Quality Order No. 2006-0003 (Sanitary Sewer Systems WDR). All public agencies that own or operate sanitary sewer systems are required to implement a sewer system management plan (SSMP) with regular reporting to the State Water Board. SSOs are defined as "Any overflow, spill, release, discharge or diversion of untreated or partially treated wastewater from a sanitary sewer system"[8].

Local

Los Angeles County Sanitation Districts and California Health & Safety Code: The County Sanitation Districts are empowered by the state's Health and Safety Code to impose a capital facilities fee for connecting, directly or indirectly, to the District's Sewerage System. This fee is used to support the cost of constructing expansions to the District's' Sewerage System for increases in the quantity of wastewater attributable to proposed projects[9].

---

[6] *http://www2.epa.gov/laws-regulations/summary-clean-water-act*
[7] *http://water.epa.gov/polwaste/npdes/*
[8] *http://www.waterboards.ca.gov/water_issues/programs/sso/#general*
[9] *Letter from County Sanitation Districts of Los Angeles County dated March 20, 2015.*

City of El Monte General Plan. Applicable El Monte General Plan policies include:

Public Service and Facilities Element, Goal PSF-3. High quality service levels for waste management, stormwater, wastewater, and water production in El Monte, sufficient to serve current and future residents, visitors, and the business community.

PSF-3.4 Wastewater. Maintain a wastewater system adequate to serve the needs of the community and protect the health and safety of all residents, businesses, and institutions.

PSF-3.8 Investment in Facilities. Ensure that adequate investments continue to be made in repairing, rehabilitating, and upgrading City infrastructure to serve current and future customers.

PSF-3.9 Public Education. Engage and inform the public and business community in a variety of venues regarding the importance of waste management, water quality, and waste management services.

Public Services and Facilities Element, Goal PSF-4. Well-managed network of infrastructure evidenced by rigorous capital improvement planning, preventive maintenance, and equitable financing.

PSF-4.1 Resources. Provide resources for technology (e.g., computerized tracking systems), staffing, and other tools necessary to automate and modernize the process of maintaining, monitoring, and protecting the City's investment in its infrastructure.

PSF-4.2 Master Plans. Prepare comprehensive master plans for all major infrastructure (e.g., roads, water, sewer, and public facilities) and ensure that findings are explicitly tied into capital improvement plans, the annual budgeting process, and the City's Vision.

PSF-4.3 Fair Share. Require development to pay the full cost of improving water, wastewater, road, parks, or other infrastructure necessitated by their projects, unless findings are made that the fair share requirement should be waived due to overriding public benefit.

PSF-4.4 Fee Structures. Review development fees, impact fees, and monthly service charges on an annual basis to ensure that adequate revenue is collected to fund the operation and maintenance of existing facilities and construction of new facilities.

PSF-4.5 Benefit Assessments. Require the formation of benefit, maintenance, or community facilities districts for large projects, specific plan areas, or neighborhood areas that desire or require additional maintenance, facilities, or levels of service.

PSF-4.6 Financial Reserves. Adopt a reserve policy that allows for the full recapitalization of infrastructure in compliance with guidelines of the Government Officers Finance Association and accepted industry norms for the replacement of infrastructure components.

PSF-4.7 Specific Plans. Require that specific plans contain comprehensive infrastructure master plans that detail infrastructure conditions and needs; prepare a financing plan to fund improvements and a cost-sharing arrangement for property owners to pay for infrastructure.

The City Public Works Department requires that developers of all new developments within the City submit a sewer area study for the project to adequately size sanitary sewer lines or determine if there is sufficient capacity for a new connection to an existing sewer line. The City requires the satisfactory completion of the capacity study by a private registered civil engineer prior to giving approval for projects that can affect the capacity of the public sewer system. The City required sewer capacity study will:

- Assess the impact of providing sanitary service to this particular area or connection and analyze the various alternates for providing such service.
- Detail the basis for the sewer design and provide the planning information necessary to assess the impact of this particular development on the City's sanitary sewer system, as well as information on the anticipated sewage flows to include special wastes added to the system.
- Analyze the capacity and condition of the existing system and will set forth mitigation requirements for developers to ensure adequate capacity.
- Justify the sizing of proposed lines to accommodate the base, peak, and wet weather flows from all area tributary to the mainline sewer under consideration or pumping station, now and in the future.

Once the sewer study is approved:

- It will be referenced directly by the plan checker when design plans for the new infrastructure are submitted to assure adequate capacity.
- All proposals for a new connection to an existing sewer must comply with the City's policies for managing available sewer capacity.
- Sewer plans for construction shall be prepared by registered civil engineers and submitted to the City for plan check.
- American Public Works Association Greenbook standards and the Los Angeles County Department of Public Works Standard Plans are referenced where more detailed-design data is to be specified. Permits for construction of any public sewer infrastructure are not issued until the plan check process has been satisfactorily completed, thus, ensuring the functional design and adequate capacity of the public sewer collection system.
- Proof of Los Angeles County Sanitation District clearance must be submitted prior to the issuance of any permits.

C. Significance Threshold

Implementation of the proposed Specific Plan would have a significant impact related to wastewater facilities if it would:

1. Exceed wastewater treatment requirements of the applicable Regional Water Quality Control Board.
2. Require or result in the construction of new wastewater treatment facilities or expansion of existing facilities, the construction of which could cause significant environmental effects.
3. Result in a determination by the wastewater treatment provider which serves or may serve the plan area that it has inadequate capacity to serve the plan area's projected demand in addition to the provider's existing commitments.

D. Impacts and Mitigation Measures

Impact U-3

Impact U-3 Development facilitated by the Specific Plan would generate an estimated 410,700 gallons per day of wastewater that would flow through the existing Whittier Narrows Water Reclamation Plan, which represents 5.87 percent of its remaining design capacity and through the Joint Water Pollution Control Plant system, which represents 0.41 percent of the remaining design capacity at the wastewater treatment facility. Impacts on wastewater facilities are considered less than significant.

Implementation of the Specific Plan would result in an incremental increase in wastewater generation. **Table 3.14-3** provides estimates for anticipated wastewater generation as a result of buildout of the Specific Plan, which is estimated to induce a net increase of 2,200 housing units and 500,000 square feet of commercial building area by 2035. At this level of growth, the City would increase its sewage flow by an estimated 410,700 gallons per day (gpd). At the Whittier Narrows Water Reclamation Plant, there is currently a design capacity of 15 million gallons per day (mgd) and currently processes an average flow of 8 mgd for a remaining capacity of 7 mgd. Wastewater generated with the implementation of the Specific Plan and treated at the Whittier Narrows Water Reclamation Plant represents 5.87 percent of its remaining capacity. Also, there is a remaining capacity at the JWPCP treatment facility of approximately 100 million gallons per day (mgd). Therefore, the wastewater generated from the implementation of the proposed Specific Plan would represent only 0.41 percent of the remaining design capacity at the JWPCP treatment facility.

Table 3.14-3: Net Wastewater Generation, Specific Plan Buildout

Land Use	Net Increase DUs or SF	Daily Generated Factor (Gal./DU or Gal./SF)[a]	Daily Wastewater Generated
Dwelling Units	2,200	156[a]	343,200
Retail	325,000	0.1[b]	32,500
Restaurant	100,000	0.2[c]	20,000
Office	75,000	0.2[d]	15,000
Total			**410,700**

Source: City of El Monte General Plan and Zoning Code Update EIR, 2011
[a] *Residential assumes Downtown Core land use*
[b] *Retail assumes commercial Downtown Core land use.*
[c] *Restaurant assumes General Commercial land use*
[d] *Office assumes Commercial Office and Professional Office Park land use*

Also, the City of El Monte falls under the jurisdiction of the Regional Water Quality Control Board, Los Angeles Region. As reviewed above, wastewater in the City is conveyed first through the City's sewer

network into County trunk sewer lines before it is brought to the Los Angeles County Sanitation District's JWPCP where it receives secondary treatment. The County is responsible for ensuring that the design capacities of their wastewater treatment facilities are compliant with federal regulations. To manage treatment and growth in the system the County uses regional population growth forecasts adopted by Southern California Association of Governments and as such the Districts' available capacity is intended to provide service levels on par with growth already projected for the region[10]. The increase in wastewater generated by implementation of the Specific Plan is considered a *less than significant* impact.

Mitigation Measures

No mitigation is required.

Significance After Mitigation

No mitigation measure are required and impacts on wastewater facilities remain *less than significant.*

Impact U-4

Impact U-4	The Specific Plan has identified two sewer projects within the Plan Area to improve the deficiencies in the City's existing wastewater system. It also states that future upgrades be based on the Sewer Master Plan update and the Sewer Area/Capacity Study prepared for each new development within the Plan Area. These improvement projects and future upgrades will mitigate impacts on the wastewater infrastructure to less than significant levels.

According to the City's Maintenance Division, there are areas within the Plan Area where there are existing wastewater system deficiencies that need improvements. However, the Specific Plan identifies the following wastewater improvement project to address those deficiencies:

- Complete the replacement of sewer main from an 8" VCP to a 12" VCP for a segment along Ramona Boulevard beginning beyond Valley Boulevard and terminating at Tyler Avenue.
- Design and construction sewer line from Johnson Avenue to Tyler Avenue

Additional replacements and upgrades of the sewer system may be necessary to as specific projects are approved in the future. Therefore, the Specific Plan includes the following requirements.

- Coordinate with the City Public Works Department in preparing the Sewer Master Plan. Include the level of development proposed by the Specific Plan in the planning of future sewer infrastructure improvements.
- Require sewer upgrades based on the Sewer Master Plan update and the Sewer Area/Capacity Study prepared for each new development within the Specific Plan area.

With the identified wastewater system improvements and requirements, impacts to the Plan Area's wastewater system will be mitigated to levels considered *less than significant.*

[10] *Letter received from County Sanitation Districts of Los Angeles County.*

Mitigation Measures

No mitigation is required.

Significance After Mitigation

No mitigation measure are required and impacts on waste water remain *less than significant.*

E. Cumulative Impacts

Wastewater generated by the implementation of the Specific Plan plus cumulative projects can be adequately treated at the JWPCP treatment facility. In addition, the City has identified sewer improvement projects citywide. These new sewer projects and new development project requirements will adequately address any future wastewater facility needs. Cumulative impacts on the wastewater system are considered *less than significant.*

Solid Waste

A. Setting

El Monte is served by three waste management companies: Valley Vista Services; American Reclamation; and Waste Management. **Table 3.14-4** presents the percentage of disposal ervice by each waste management company for the total City. Valley Vista Services provides 100 percent of the citywide curbside residential (single family) collection and recycling services, 50 percent of the collection and recycling of trash from multiple family residential (apartments, townhomes), and 50 percent of commercial collections. American Reclamation provides 50 percent of the multifamily disposal service and 25 percent of the commercial. Waste Management provides 25 percent of the commercial disposal service.

Table 3.14-4: El Monte's Solid Waste Disposal Services

Disposal Companies	Residential	Multifamily	Commercial
Valley Vista	100%	50%	50%
American Reclamation	--	50%	25%
Waste Management	--	--	25%

Solid waste disposal service for the Plan Area is provided primarily by Valley Vista, with the exception of the Valley Mall, which is provided by American Reclamation. Valley Vista provides once per week collection of trash and recyclable waste from El Monte residents. Valley Vista also uses compressed natural gas (CNG) waste disposal vehicles.

According to the California Department of Resources Recycling and Recovery (CalRecycle), in 2015, the City of El Monte disposed of 68,908 tons of solid waste in landfills. The 2015 tonnage was a decline of 34.7 percent from the 2010 disposal tonnage of 105,550 tons of solid waste. Of the total 2015 disposal tonnage, 42,599 tons or 61.8 percent of the total solid waste from El Monte went to the Olinda Alpha Sanitary Landfill located in the City of Brea, Orange County and 19,769 tons or 28.7 percent of the total solid waste went to El Sobrante Landfill in the City of Corona, Riverside County. The remaining 9.5 percent of the solid waste generated in El Monte was disposed of at 10 landfills located throughout southern California[11].

Information from CalRecycle indicates that the Olinda Alpha Sanitary Landfill (30-AB-0035) is a Class III landfill that accepts agricultural, industrial, construction/demolition, mixed municipal, tires and wood waste. Olinda Alpha has a maximum permitted throughput of 8,000 ton per day and a maximum

[11] *http://www.calrecycle.ca.gov/LGCentral/Reports/*

permitted capacity of 148.8 million cubic yards. In 2014, there was a remaining capacity of 34.2 million cubic yards and is permitted to operate until December 31, 2021, although the date could vary depending on the volume of waste received for disposal.

The El Sobrante Landfill (33-AA-0217) is a Class III landfill that accepts mixed municipal, construction/demolition, and tires. This landfill has a maximum permitted capacity of 184.9 million tons and based on information from the El Sobrante Landfill Annual Monitoring Report in 2014, the remaining capacity of the landfill was 154.8 million tons[12]. Currently the maximum permitted throughput is 16,054 tons per day. The El Sobrante Landfill is permitted to remain in operation until 2045, however the landfill could continue to have in excess of 53 years of capacity at current tonnage projections.

B. Regulatory Framework

Federal

There are no federal regulations in regards to solid waste applicable to the proposed DHSP.

State

Integrated Waste Management Act (AB 939): The CA Integrated Waste Management Act was enacted in 1989 mandating municipalities to meet solid waste diversion goals of 25 percent by 1995 and 50 percent by 2000. This was measured by establishing base-year solid waste generation taken to landfills compared against amount of solid waste subsequently diverted. Part of this requirement was the creation of an Integrated Waste Management Plan to pursue new recycling programs or waste minimization initiatives[13].

State Mandatory Commercial Recycling Law (AB 341): AB 341 was enacted in 2011, imposing mandatory recycling for businesses and multi-family residential uses. All businesses that generate four or more cubic yards of waste weekly are required to provide recycling. Multi-family housing with five or more units must also provide recycling.[14]

Local

City of El Monte Municipal Code Section 8.20.261 - C&D Diversion Requirements. El Monte's Construction and Demolition (C&D) ordinance requires at least 50 percent of C&D material generated by covered projects[15] be diverted from landfilling or other form of disposal.

---

[12] *El Sobrante Landfill Annual Monitoring Report, prepared by USA Waste, a subsidiary of Waste Management Inc. for the County of Riverside in 2014*
[13] *http://www.cawrecycles.org/facts_and_stats/california_recycling_laws*
[14] *http://site.republicservices.com/site/pacheco-ca/en/pages/recycling.aspx*
[15] *8.20.260 - Projects subject to C&D diversion requirements. A. Covered C&D Projects. Any project, activity or undertaking involving construction, demolition, additions, alterations, remodeling, encroachments, tenant improvements or grading within the city shall be considered a "covered project" for purposes of this chapter when such project, activity or undertaking requires a demolition permit, building permit, encroachment permit and/or grading permit.*

City of El Monte Source Recovery and Recycling Element (SRRE). The City of El Monte has adopted a Source Recovery and Recycling Element (SRRE) as required by Assembly Bill (AB) 939, the California Integrated Waste Management Act of 1989. AB 939 requires the City to adopt an SRRE, and to divert 25 percent of the solid waste from its landfills by January 1, 1995 and 50 percent by the year 2000.

C. Significance Threshold

Implementation of the proposed DHSP would have a significant impact related to solid waste facilities if it would:

- Not be served by a landfill with sufficient permitted capacity to accommodate the Plan's solid waste disposal needs.
- Not comply with federal, state, and local statutes and regulations related to solid waste

D. Impacts and Mitigation Measures

Impact U-5

Impact U-5	Development facilitated by the Specific Plan would generate an increase of up to 9.4 tons of solid waste per day. However, because the Olinda Alpha Sanitary Landfill and the El Sobrante Landfill have adequate capacity to serve the Specific Plan, impacts related to solid waste facilities would be less than significant.

As presented in **Table 3.14-5**, buildout of the Specific Plan could increase the generation of solid waste by approximately 18,929 pounds or approximately 9.5 tons per day. The maximum permitted daily disposal rate for Olinda Alpha Sanitary Landfill is 8,000 tons of solid waste per day and 16,054 tons per day into the El Sobrante Landfill. The Specific Plan overall represents 0.12 percent of the maximum permitted daily disposal rate for Olinda Alpha and 0.06 percent for El Sobrante. Moreover, all new development in the City is required to implement existing and future waste reduction programs in conformance with the City's SRRE, which will help reduce the amount of disposed solid waste. Existing landfill facilities and average daily waste allowance coupled with the City's overall waste reduction and recycling policies make this impact less than significant.[16]

[16] *California Department of Resources Recycling and Recovery (CalRecycle), http://www.calrecycle.ca.gov/SWFacilities/Directory/*

Table 3.14-5: Net Solid Waste Generation, Specific Plan Buildout

Land Use	Net Increase DUs or SF	Generation Factor (Pounds per day)[a]	Solid Waste Generated (Pounds per day)
Dwelling Units	2,200	5.32[a]	11,704
Retail	325,000	0.009[b]	2,925
Restaurant	100,000	0.024[c]	2,400
Office	75,000	0.024[d]	1,800
Total			**18,829**

Source: City of El Monte General Plan and Zoning Code Update EIR, 2011
[a] *Residential assumes Downtown Core land use*
[b] *Retail assumes commercial Downtown Core land use.*
[c] *Restaurant assumes General Commercial land use*
[d] *Office assumes Commercial Office and Professional Office Park land use*

Mitigation Measure

No mitigation measures are required.

Significance After Mitigation

The impacts of the proposed Specific Plan would be less than significant and no mitigation measures are required, therefore the residual impact of the Specific Plan would remain less than significant.

E. Cumulative Impacts

Planned and pending development in the Specific Plan area would continue to increase solid waste generation. As discussed under Impact U-4, area landfills have capacity to accommodate additional solid waste, and potential impacts of full buildout of the Specific Plan would be less than significant. Cumulatively, other areas which utilize the same landfills as the proposed Specific Plan would likely also continue to experience growth and associated increases in solid waste generation. State-mandated solid waste diversion rates (for recycling) would continue to minimize the quantity of waste directed to area landfills, and compliance with General Plan and Specific Plan policies would maintain or improve upon existing solid waste diversion rates.

The Olinda Alpha Sanitary Landfill is expected to remain open with sufficient disposal capacity to accommodate its existing service territory until 2021; and the El Sobrante Landfill is expected to remain open with sufficient disposal capacity to accommodate its existing service territory until 2045. Thus, cumulative impacts to solid waste facilities would be less than significant and the Specific Plan's contribution to solid waste impacts would not be cumulatively considerable.

Chapter 4: Alternatives

A. Purpose and Plan Objectives

This Chapter describes a range of reasonable alternatives that would feasibly attain most of the project objectives and would avoid or reduce any significant environmental effects of the proposed Specific Plan. Through comparison of these alternatives, the relative advantages of each can be evaluated and considered toward making a balanced and well-informed decision.

Consistent with CEQA Guidelines Section 15126.6, the discussion of alternatives must focus on alternatives that are potentially feasible and capable of achieving major project objectives while avoiding or substantially lessening any significant environmental effects of the project. Further, the EIR need not consider every conceivable alternative to the project or alternatives whose effects cannot be reasonably ascertained and whose implementation is remote and speculative. The CEQA Guidelines require that the range of alternatives to be addressed be governed by "a rule of reason" to allow for a reasoned choice.

The EIR must consider potentially feasible alternatives that will inform public decision-makers of the differential environmental impacts which may be associated with each potential alternative, thus enabling a reasoned judgment to be made as to which alternative to the proposed project may be environmentally superior.

As presented in Chapter 2, *Project Description*, the following are Guiding Principles of the proposed Specific Plan:

1. Create a mixed-use, pedestrian- and transit-oriented urban village focused around a pedestrian-friendly Main Street that is woven together by attractive streetscape improvements and paseos.
2. Transform the Downtown into a central shopping and entertainment district.
3. Make Downtown an enticing place for investment by designing an active and vibrant street environment that attracts new businesses.
4. Incorporate a variety of housing opportunities throughout the Downtown that include a mix of densities and product types.
5. Create a Downtown supported by an expanded and improved public transit system.
6. Provide a blend of old and new, where new development takes it design cues from the existing El Monte culture, character, and history.
7. Provide a safe, active, and livable urban atmosphere with distinct streetscape design connected by public plazas, promenades, and paseos. Create entryways at key intersections, and improve streetscapes and signage.
8. Provide a well-connected and balanced system of multimode streets (e.g., bus, auto, and bike) connected to pedestrian linkages that are designed to accommodate all users regardless of age or ability.

The following discussion considers four reasonable alternatives to the proposed Specific Plan:

- No Project Alternative
- Reduced Density Alternative
- Reduced Specific Plan Area Alternative
- Complete Streets Mobility Alternative

In addition, this Chapter discusses alternatives that were identified but were not considered for in-depth analysis and their reason for rejection.

B. Alternatives Considered but Rejected for Further Analysis

The Plan Area is identified as the Downtown of the City and includes the street currently named Valley Mall (to be changed to Main Street). The Specific Plan's vision is to revitalize and promote economic development in the area through proposed land uses, a pedestrian-oriented environment, and landscape beautification enhancements. As the original central business district of the City, an alternative site for the proposed Specific Plan is not appropriate because the land use and development guidelines were specifically developed to address the needs of Downtown El Monte and to take advantage of the opportunities around the existing transit facilities. An alternative site will have different needs, opportunities, constraints, and objectives from those of Downtown El Monte. There are no other locations within the City that could accommodate the types of uses proposed by the Specific Plan. Hence, an alternative location was not evaluated further.

C. Alternatives Selected for Further Analysis

Four alternatives have been identified to represent a reasonable range of development scenarios that could occur within the Specific Plan area. In addition to Alternative 1 (No Project Alternative), which is required under CEQA, the EIR also examined Alternative No. 2 (Reduced Density Alternative), a development scenario based on an overall reduction in residential densities and commercial intensities as compared to the proposed Specific Plan. Alternative No. 3 (Reduced Specific Plan Area Alternative) reduced the size of the Plan Area to include just the Main Street Sub-Area and the Station Sub-Area, and Alternative No. 4 (Complete Streets Mobility Alternative) examined the impacts associated with closure of Valley Mall/Main Street to vehicle traffic and converted into a pedestrian zone. **Table 4-1** summarizes the development potential for each alternative evaluated below.

No 1. No Project Alternative

The No Project Alternative consists of a scenario under which the Specific Plan as proposed would not proceed. Under this alternative, future development would occur in accordance with the current City of El Monte's adopted General Plan policies and land use designations and Zoning Ordinance through the

year 2035. It is projected that this alternative would result in 163 new housing units and 162,000 square feet of commercial building development.

Table 4-1: Alternative Analysis, Net Increase in Potential Development from 2015 to 2035

		Alternatives			
		1	2	3	4
Use	Proposed Specific Plan[1]	No Project[2]	Reduced Density[3]	Reduced Specific Plan Area[4]	Complete Streets Mobility[5]
Residential (DU)	**2,200**	**163**	**1,650**	**600**	**2.200**
Commercial (SF)	**500,000**	**162,000**	**375,000**	**120,000**	**500,000**
Retail	325,000	106,000	244,000	78,000	325,000
Restaurant	100,000	32,000	75,000	24,000	100,000
Office	75,000	24,000	56,000	18,000	75,000

[1] *Distribution of commercial uses: 65% retail; 20% restaurant; and 15% office*
[2] *Growth according to current Zoning Ordinance*
[3] *Reduction of density/intensity by 25% relative to the proposed Specific Plan*
[4] *Reduced Specific Plan area includes only the Main Street and Station Sub-Areas*
[5] *No change in the level of anticipated growth relative to the proposed Specific Plan*

Impact Analysis. The No Project alternative would involve no changes to existing regulatory controls and land use policies for the Plan Area. The circulation and infrastructure improvements in the Plan Area associated with the Specific Plan would not occur. In addition, zoning and other changes to the City's General Plan Land Use Map would not occur.

As such, this alternative would have no additional impact with respect to aesthetics, air quality, biological resources, cultural resources, geology, greenhouse gas (GHG) emissions, hazards and hazardous materials, hydrology, land use, noise, population and housing, public services and recreation, traffic, or utilities and service systems other than what is currently allowed under the existing General Plan and Zoning designations. Temporary construction impacts associated with the Specific Plan would be avoided. This alternative would also avoid the proposed Specific Plan's significant and unavoidable impacts with respect to noise. No mitigation measures would be required for the No Project alternative. This alternative would not preclude development in the Plan Area, but this alternative assumes that this existing pattern would continue and that limited transit-oriented development would occur in the Plan Area. Overall impacts would be lower than those of the proposed Specific Plan since no substantial change to environmental conditions would occur. The beneficial effects associated with the Specific Plan (i.e., pedestrian facility, bicycle facility, intersection, and streetscape improvements) would also not occur.

The No Project alternative would not meet any of the objectives of the Specific Plan.

No 2. Reduced Density Alternative

Under the Reduced Density Alternative, development would occur based on the land use concept and development guidelines of the proposed Specific Plan, with the exception that the allowable residential densities and commercial intensities for all land uses would be reduced by 25 percent. It is projected that this alternative would result in a net increase of 1,650 housing units and 375,000 square feet of commercial building area by the year 2035. Of the 375,000 square feet of commercial use, 244,000 square feet is anticipated for retail, 75,000 square feet for restaurant, and 56,000 square feet for office uses.

The following is a comparative analysis of each environmental topic under Alternative 2 and the proposed Specific Plan:

Aesthetics. Under this reduced density alternative to the propose Specific Plan, buildout would maintain the current and projected urban character of the Plan Area. A less dense alternative to the Specific Plan is expected to result in infill development and building additions, but new construction is expected to result in less building height than permitted under the Specific Plan. A less dense Downtown than the Specific Plan provides for would still maintain the urban character of the Plan Area and therefore no measurable changes would occur to aesthetics, views, and the visual character of the Downtown. Under this alternative, a portion of the Downtown would be redeveloped under the Specific Plan, which could result in impacts to existing aesthetics. However, subsequent projects would undergo their own environmental review at the time of development.

Air Quality. Buildout under this alternative would be less dense and would result in less development overall than the proposed Specific Plan. Both temporary construction emissions and long-term operation emissions for this alternative were calculated using the California Air Emissions Estimator Model (CalEEMod), version 2016.3.1. Construction for this alternative was assumed to occur over a 15-year period. As shown in **Table 4-2**, emissions for this alternative would be incrementally lower than that of the proposed Specific Plan; however, emissions would still exceed SCAQMD operational thresholds for and would remain significant and unavoidable.

Table 4-2: Alternative 2 Air Quality Emissions

	Emissions Estimate (lbs/day)					
	ROG	NOx	CO	SO_2	PM_{10}	$PM_{2.5}$
			Construction			
Alternative 2	55.7	68.0	96.6	0.3	18.0	6.1
Specific Plan	67.7	70.4	122.9	0.3	23.6	7.6
			Operation			
Alternative 2	73.7	157.3	432.0	1.6	151.3	42.3
Specific Plan	98.8	208.8	574.0	2.1	200.6	56.1

Source: See Appendix B for calculations, assumptions, and maximum lbs/day per year for entire construction period (2017 through 2032). Assumed compliance with SCAQMD Fugitive Dust Rule 403 and SCAQMD Architectural Coating Rule 1113.

Biological Resources. This alternative would include less development overall, but the development would occur within the same boundaries. Therefore the development under this alternative would still have the potential to have a significant impact by removing or infringing on public, native, or heritage trees and mitigation measure BIO-1 would still be required. Impacts would be similar to those of the proposed Specific Plan.

Cultural Resources. Alternative 2 would decrease the amount of development in comparison to the proposed project. It would involve development throughout the same area as the proposed Specific Plan. This alternative would have the same potential to have a significant impact through encountering previously undiscovered human remains and archaeological and paleontological artifacts. Therefore mitigation measures CR-1 and CR-2 would still be required. Additionally, since no projects are currently proposed, development under this alternative would still have the potential to demolish or have a negative effect on historic resources currently unidentified, therefore, mitigation measures CR-1 (a and b) would still be required. Impacts under this alternative would be similar to those of the proposed Specific Plan.

Geology and Soils. Alternative 2 would accommodate 550 fewer residences, and 125,000 square feet less commercial development. Development under this alternative, therefore, would expose fewer residential and non-residential structures to geologic hazards, including groundshaking, liquefaction, and expansion. Development under this alternative would still be subject to the Alquist-Priolo Earthquake Fault Zone Act, California Building Code (CBC) provisions, and policies contained in the City of El Monte General Plan. Impacts related to groundshaking and soil instability would be less than significant.

Greenhouse Gas Emissions. Alternative 2 would accommodate 550 fewer residential units and reduce the proposed commercial development by 125,000 square feet. The service population (sum of population and employees) for this alternative would be 6,662 (6,353 residents plus 309 employees), which is 31 percent less than the Specific Plan's service population of 9,700. As shown in **Table 4-3**, while

total emissions for this alternative would be incrementally lower than those of the proposed Specific Plan, the total emissions per service population would be incrementally higher, but still less than the Tier IV threshold of 4.1 MT CO_{2e} per service population. Impacts would be less than significant.

Table 4-3: Alternative 2 Greenhouse Gas Emissions

	Annual Emissions
Alternative 2	
Total CO_{2e} Emissions	26,329 MT CO_{2e}
Alternative 2 Service Population	6,662
Alternative 2 Total Emissions/Service Population	3.9 MT CO_{2e}
Proposed Project	
Proposed Project Total Emissions	35,500 MT CO_{2e}
Proposed Project Total Emissions/Service Population	3.7 MT CO_{2e}

Sources: See Appendix B for calculations and for GHG emission factor assumptions.

Hazards and Hazardous Materials. Alternative 2 would decrease residential and non-residential development in comparison to the Specific Plan, but would still result in the development of residential or commercial land uses within the airport runway protection zone (RPZ) of the San Gabriel Valley Airport. Therefore, impacts would be potentially significant and mitigation measures HAZ-1 a and b would still be required. While it is possible that the same number of buildings could be placed in the RPZ, it is more likely that development would be evenly spread throughout the Plan Area, reducing the number of buildings in the RPZ. Therefore, impacts would be incrementally lower than those of the proposed Specific Plan.

Hydrology and Water Quality. Alternative 2 would decrease the intensity and amount of residential and non-residential development compared to the proposed Specific Plan. Therefore, development under this alternative would create less impermeable surface area within the Plan Area as the Proposed Specific Plan. This alternative would also require less water than the proposed Specific Plan. Impacts would be less than significant and incrementally lower than under the proposed Specific Plan.

Land Use and Planning. Under this alternative, the residential density and commercial intensity would be reduced by 25 percent from the proposed Specific Plan. This would result in 550 fewer residential units and 125,000 less commercial square feet compared to the proposed Specific Plan. While transit-oriented development would still occur under this alternative, the fewer number of residential units would limit housing opportunities for transit users that may want to live in close proximity to transit centers. This alternative would still be consistent, although to a lesser degree than the proposed Specific Plan, with the SCAG 2016 RTP/SCS policies that encourage maximizing opportunities related to transit-oriented development and reducing the dependency on the automobile. Therefore, land use and planning impacts associated with this alternative would be less than significant, but incrementally higher than the level of impact under the proposed Specific Plan.

Noise. Alternative 2 would reduce residential development and result in an overall decrease of non-residential buildout within the Plan Area. Noise and vibration levels would be similar to the proposed Specific Plan as the same type of construction equipment would be used. The overall duration of noise and vibration associated with construction would likely be less since the overall amount of development would be reduced. Similar to the proposed Specific Plan, noise and vibration impacts from construction-related noise would be less than significant with adherence to the City's Municipal Code.

Similar to the proposed project, this alternative would involve development adjacent to residential neighborhoods. Existing and future sensitive receptors within the Plan Area would be exposed to operational noise from buildout under this alternative, although fewer sensitive receptors would be introduced to the Plan Area under this alternative. Similar to the proposed Specific Plan, development under this alternative would be subject to the El Monte General Plan's goals, policies, and Land Use and Noise Compatibility Guidelines. As with the proposed project, impacts would be significant and unavoidable due to the existing noise levels in the area and the increase in traffic associated with the alternative.

This alternative would contribute additional vehicle trips on roadways that generate noise levels of approximately 75 dBA. This alternative would require compliance with all of the same noise mitigation measures required for the proposed Specific Plan. Although this alternative's increase in operational noise levels would be reduced when compared to the proposed Specific Plan, traffic related noise impacts would remain significant and unavoidable.

Population and Housing. The Reduced Density Alternative would result in 550 fewer residential units and 125,000 less commercial square footage at buildout than the proposed Specific Plan. Assuming the same household size and vacancy rates and employment generation factors, there would be 2,117 fewer residents and 310 fewer jobs than the proposed Specific Plan. Therefore, implementation of this alternative would result in an increase in population and housing, but to a lesser degree than growth projected under the proposed Specific Plan. The level of housing and population growth would be consistent with the SCAG growth forecasts and would not induce substantial growth in the Plan Area.

Public Services and Recreation. Alternative 2, the Reduced Density Alternative, would result in 550 fewer residential units and 125,000 less commercial square footage at buildout than the proposed Specific Plan. Therefore, impacts to police and fire services would be incrementally less than those of the proposed Specific Plan. Fewer residents would result in smaller demand place on parks, recreational facilities, and libraries. In addition, there would be a smaller new student population that would have less impact on school capacity than the proposed Specific Plan.

Transportation and Circulation. The Reduced Density Alternative would result in 16,027 daily trips or 75 percent of the daily trips generated under the proposed Specific Plan. Less daily trips results in less traffic impacts relative to the proposed Specific Plan.

Utilities and Service Systems. With fewer number of units and commercial square footage, the demand on water would be reduced by 128,375 gallons per day, sewer generated by 102,700 gallons per day, and solid waste generated by 4,711 pounds per day relative to the proposed Specific Plan. Hence, the demand for water, the treatment of wastewater, and the disposal of solid waste in landfills would be less than what would occur by the proposed Specific Plan.

No 3. Reduced Plan Area Alternative

The Reduced Plan Area Alternative would result in a reduction in the Specific Plan area from the current 115 acres to approximately 38 acres. This area would include only the Main Street Sub-Area and the Station Sub-Area. The reduced area under this alternative would include the El Monte Metrolink Station, the area on the east side of Santa Anita Avenue south of Valley Boulevard, and properties along Valley Mall/Main Street. The objectives for transit oriented development would remain, but land use regulations and circulation/infrastructure improvements would be focused on the underutilized areas within the reduced Specific Plan Area. This alternative would result in an increase of only 600 housing units and 120,000 square feet of commercial building area by 2035. Projected commercial building area under this alternative is projected to include 78,000 square feet of retail, 24,000 square feet of restaurant, and 18,000 square feet of office building area.

Aesthetics. Under this reduced Plan Area alternative to the project, buildout would maintain the current and projected urban character of the Plan Area. A smaller area is expected to focus more on infill development and building additions, and less new construction. A smaller Plan Area within the Downtown would still maintain the urban character of the area with no measurable changes to aesthetics, views, and the visual character of the Downtown. The benefits from the Specific Plan urban design features would still apply to the Main Street and Station Sub-Areas, but would not extend to the excluded areas.

Air Quality. Buildout under this alternative would be less dense and would result in less development overall than the proposed Specific Plan. Both temporary construction emissions and long-term operation emissions for this alternative were calculated using the California Air Emissions Estimator Model (CalEEMod), version 2016.3.1. Construction for this alternative was assumed to occur over a 5-year period. As shown in **Table 4-,** emissions for this alternative would be incrementally lower than that of the proposed Specific Plan; therefore, impacts would be less than significant and lower than those of the proposed Specific Plan.

Table 4-4: Alternative 3 Air Quality Emissions

	Emissions Estimate (lbs/day)					
	ROG	NOx	CO	SO_2	PM_{10}	$PM_{2.5}$
			Construction			
Alternative 3	79.1	68.0	50.4	0.1	7.8	4.5
Specific Plan	67.7	70.4	122.9	0.3	23.6	7.6
			Operation			
Alternative 3	25.9	52.8	149.2	0.5	51.2	14.3
Specific Plan	98.8	208.8	574.0	2.1	200.6	56.1

Source: See Appendix B for calculations, assumptions, and maximum lbs/day per year for entire construction period (2017 through 2032). Assumed compliance with SCAQMD Fugitive Dust Rule 403 and SCAQMD Architectural Coating Rule 1113.

Biological Resources. This alternative would include less development overall and within a smaller area. Therefore the development under this alternative would still have the potential to have a significant impact by removing or infringing on public, native, or heritage trees and mitigation measure BIO-1 would still be required. Impacts would be similar to those of the proposed Specific Plan.

Cultural Resources. Alternative 3 would decrease the amount of development in comparison to the proposed project and place it within a smaller area. This alternative would have the same potential to have a significant impact through encountering previously undiscovered human remains and archaeological and paleontological artifacts. Therefore mitigation measures CR-1 and CR-2 would still be required. Additionally, since no projects are currently proposed, development under this alternative would still have the potential to demolish or negatively alter historic resources currently unidentified. Therefore, mitigation measures CR-1 (a and b) would still be required. Impacts under this alternative would be similar to those of the proposed Specific Plan.

Table 4-5: Alternative 3 Greenhouse Gas Emissions

	Annual Emissions
Alternative 3	
Total CO_{2e} Emissions	8,906 MT CO_{2e}
Alternative 3 Service Population	2,029
Alternative 3 Total Emissions/Service Population	4.4 MT CO_{2e}
Proposed Project	
Proposed Project Total Emissions	35,500 MT CO_{2e}
Proposed Project Total Emissions/Service Population	3.7 MT CO_{2e}

Sources: See Appendix B for calculations and for GHG emission factor assumptions.

Geology and Soils. Alternative 3 would accommodate 1,600 fewer residential units and 380,000 less square feet of commercial development compared to the proposed Specific Plan. Development under this alternative, therefore, would expose fewer residential and non-residential structures to geologic hazards, including groundshaking, liquefaction, and expansion. Development under this alternative would still be subject to the Alquist-Priolo Earthquake Fault Zone Act, California Building Code (CBC) provisions, and policies contained in the City of El Monte General Plan. Impacts related to groundshaking and soil instability would be less than significant.

Greenhouse Gas Emissions. Alternative 3 would accommodate 1,600 fewer residential units and reduce the proposed commercial development by 380,000 sf. The service population (sum of population and employees) for this alternative would be 2,029 (1,733 residents plus 296 employees), which is 79 percent less than the Specific Plan's service population of 9,700. As shown in Table 4-5, while total emissions for this alternative would be incrementally lower than those of the proposed Specific Plan, the total emissions per service population would be above the Tier IV threshold of 4.1 MT CO2e per service population. Therefore mitigation such as a greenhouse gas reduction plan would be required and impacts would be greater than those of the proposed Specific Plan.

Hazards and Hazardous Materials. Alternative 3 would decrease residential and non-residential development in comparison to the Specific Plan, but since the alternative would place development in the Main Street and Station Sub-Area, it would still result in the development of residential or commercial land uses within the airport runway protection zone (RPZ) of the San Gabriel Valley Airport. Therefore mitigation measures HAZ-1 a and b would still be required. However this alternative would place fewer buildings in the RPZ since it would eliminate development within the Monte Vista Sub-Area. Therefore, impacts would be less than significant after mitigation and incrementally better than those of the proposed Specific Plan.

Hydrology and Water Quality. Alternative 3 would decrease the intensity and amount of residential and non-residential development compared to the proposed Specific Plan. Therefore, development under this alternative would create less impermeable surface area within the Plan Area as the Proposed Specific Plan. This alternative would also require less water than the proposed Specific Plan. Impacts would be less than significant and incrementally lower than under the proposed Specific Plan.

Land Use and Planning. Alternative 3, the Reduced Plan Area Alternative, would include only the Main Street and Station Sub-Areas, which together total approximately 38 acres or one-third of the proposed Plan Area. Under this alternative, there would be 1,600 fewer residential units and 380,000 less commercial square footage compared to the proposed Specific Plan. While transit oriented development would still occur under this alternative, the fewer residential units would limit housing opportunities for transit users that want to live in close proximity to transit centers. These housing opportunities would not be available in the Zocalo and Monte Vista Sub-Areas, even though portions of these two sub-areas are within a five-minute walk of the El Monte Station and the Metrolink Station. This would be less consistent with the SCAG 2016 RTP/SCS policies that encourage maximizing opportunities related to transit-

oriented development and less dependence on the automobile. Although land use and planning impacts associated with this alternative would be less than significant, it would be incrementally higher than the level of impact under the proposed Specific Plan.

Noise. Alternative 3 would reduce residential development and result in an overall decrease of non-residential buildout within the Plan Area. Noise and vibration levels would be similar to the proposed Specific Plan as the same type of construction equipment would be used. The overall duration of noise and vibration associated with construction would likely be less since the overall amount of development would be reduced. Similar to the proposed project, noise and vibration impacts from construction-related noise would be less than significant with adherence to the City's Municipal Code.

Similar to the proposed project, this alternative would involve development adjacent to residential neighborhoods. Existing and future sensitive receptors within the Plan Area would be exposed to operational noise from buildout under this alternative, although fewer sensitive receptors would be introduced to the Plan Area under this alternative. Similar to the proposed Specific Plan, development under this alternative would be subject to the El Monte General Plan's goals, policies, and Land Use and Noise Compatibility Guidelines. As with the proposed project, impacts would be significant and unavoidable due to the existing noise levels in the area and the increase in traffic associated with the alternative.

This alternative would contribute additional vehicle trips on roadways that generate noise levels of approximately 75 dBA. This alternative would require compliance with all of the same noise mitigation measures required for the proposed Specific Plan. Although this alternative's increase in operational noise levels would be reduced when compared to the proposed Specific Plan, traffic related noise impacts would remain significant and unavoidable.

Population and Housing. Alternative 3, the Reduced Plan Area Alternative, would result in 1,600 fewer residential units and 380,000 less commercial square footage at buildout than the proposed Specific Plan. Housing and commercial growth would be limited to the Main Street and Station Sub-Areas. Assuming the same household size and vacancy rates and employment generation factors, there would be 6,157 fewer residents and 938 fewer jobs than the proposed Specific Plan. Therefore, implementation of this alternative would result in an increase in population and housing, but to a lesser degree than growth projected under the proposed Specific Plan. The level of housing and population growth would be consistent with the SCAG growth forecasts and would not induce substantial growth in the Plan Area.

Public Services and Recreation. Alternative 3, the Reduced Plan Area Alternative, would not include the Zocalo and Monte Vista Sub-Areas. This would result in development of 1,600 fewer residential units and 380,000 fewer square feet of commercial building area than the proposed Specific Plan at buildout. Since the residential and worker population would not increase to the same degree as the proposed Specific Plan, fewer police or fire personnel would be required to serve the smaller Plan Area. This alternative would also result in fewer demands on parks and recreational facilities, libraries, and schools because of

the fewer number of total residents and school age children than would be generated by the proposed Specific Plan. Overall, this alternative would result in less development at buildout and fewer impacts on public services and recreational resources than at would result from the proposed Specific Plan.

Transportation and Circulation. The Reduced Plan Area Alternative would generate 5,416 daily trips or 25 percent of the total daily trips under the proposed Specific Plan. This is a significant reduction in the daily trips relative to the proposed Specific Plan.

Utilities and Service Systems. With fewer number of units and commercial square footage, the demand on water would be reduced by 376,125 gallons per day, sewer generated by 300,900 gallons per day, and solid waste generated by 13,927 pounds per day relative to the proposed Specific Plan. Hence, the demand for water, the treatment of wastewater, and the disposal of solid waste in landfills would be less than what would occur by the proposed Specific Plan.

No 4. Complete Streets Mobility Alternative

Under the Complete Streets Mobility Alternative, the same level of development would occur as the proposed Specific Plan. However, the Valley Mall/Main Street would be closed to vehicle traffic from Santa Anita Avenue on the west to Ramona Boulevard on the east. This 0.65-mile segment would be converted into a pedestrian zone with public and commercial uses. Public uses could consist of parks, plazas, playgrounds, and stages. Commercial uses could include vending kiosks, outdoor dining, and farmer's markets. This alternative would reduce the number of roadways in the Specific Plan and increase the amount of land area devoted to pedestrians and public spaces creating a more complete streets orientation to the Specific Plan Area. As a result, this alternative would also include the elimination of the two Valley Mall intersections, one at Santa Anita on the west and one at Ramona Boulevard on the east thus reducing the number of conflict points between pedestrians and vehicles and improve traffic congestion in and around the area.

Aesthetics. Under this alternative, the visual character of Valley Mall would change as a result of closing the roadway to vehicle traffic and converting the space into a pedestrian environment for non-motorized travel and public amenities. The resulting changes to the public realm environment would maintain the current pedestrian orientation of Valley Mall and result in no measurable difference in the visual quality of the Plan Area between the project and this alternative.

Air Quality. Buildout under this alternative would be the same as that under the proposed Specific Plan. This alternative would convert a segment of Main Street to a pedestrian zone. This would increase the amount of traffic on the other streets. There would be an incremental change in construction emissions in order to construct the pedestrian zone. Additionally, the inclusion of the pedestrian zone could incrementally reduce vehicle miles travelled (VMT), however any reduction would be small and would not significantly affect the vehicle emissions associated with operations of the Specific Plan. Emissions associated with construction, area, energy, solid waste, and water would remain the same. Impacts would be less than significant and the same under this alternative when compared to the proposed project.

Biological Resources. This alternative would include the same amount of development as the proposed Specific Plan. The inclusion of a pedestrian zone would not change the potential for the development to impact trees. Mitigation measure BIO-1 would still be required. Impacts would be similar to that of the proposed project.

Cultural Resources. Alternative 4 would include the same amount of development in the same overall area. The inclusion of the pedestrian zone on Main Street would not change the potential to encounter previously undiscovered human remains and archeological and paleontological artifacts. Therefore mitigation measures CR-1 and CR-2 would still be required. Additionally, since no projects are currently proposed, development under this alternative would still have the potential to demolish or negatively alter historic resources currently unidentified, therefore, mitigation measures CR-1 (a and b) would still be required. Impacts under this alternative would be similar to those of the proposed Specific Plan.

Geology and Soils. Alternative 4 would accommodate the same number of residential units and commercial development as the proposed Specific Plan. Development under this alternative, therefore, would expose fewer residential and non-residential structures to geologic hazards, including groundshaking, liquefaction, and expansion. Development under this alternative would still be subject to the Alquist-Priolo Earthquake Fault Zone Act, California Building Code (CBC) provisions, and policies contained in the City of El Monte General Plan. Impacts related to groundshaking and soil instability would be less than significant.

Greenhouse Gas Emissions. Alternative 4 would involve the same amount of development over the same area. The same emissions would occur as with the proposed Specific Plan. The proposed inclusion of a pedestrian zone on Main Street may incrementally reduce VMT, however any reduction would be minimal and emissions would remain similar to the proposed project. Additionally, emissions associated with construction, area, energy, solid waste, and water would remain the same. Impacts would be less than significant and the same as the proposed Specific Plan.

Hazards and Hazardous Materials. Alternative 4 would place the same amount of development in the Plan Area and would therefore result in the development of residential or commercial land uses within the airport runway protection zone (RPZ) of the San Gabriel Valley Airport. Therefore mitigation measures HAZ-1 a and b would still be required. Impacts would be less than significant after mitigation and the same as those of the proposed Specific Plan.

Hydrology and Water Quality. Alternative 4 would include the same intensity and amount of residential and non-residential development compared to the proposed Specific Plan. Therefore, development under this alternative would create the same amount of impermeable surface area within the Plan Area as the Proposed Specific Plan. This alternative would also require the same amount of water as the proposed Specific Plan. Impacts would be less than significant and the same as the proposed Specific Plan.

Land Use and Planning. With the same amount of residential and commercial development within the Plan Area as the proposed Specific Plan, impacts would be the same. Development patterns would be the same as the proposed Specific Plan, with an emphasis on higher density and mixed-used development. However, this alternative would increase the amount of land area devoted to pedestrians and public spaces creating a more complete streets orientation to the Plan Area. This would be consistent with the SCAG policy that encourages land use and growth patterns that facilitate transit and active transportation, such as walking and biking. Impacts would be less than significant and incrementally better under this alternative when compared to the proposed Specific Plan.

Noise. Alternative 4 would result in the same amount of residential and non-residential development buildout within the Plan Area. Noise and vibration levels would be similar to the proposed Specific Plan as the same type of construction equipment would be used. The overall duration of noise and vibration associated with construction would be the same. Similar to the proposed project, noise and vibration impacts from construction-related noise would be less than significant with adherence to the City's Municipal Code.

Similar to the proposed project, this alternative would involve development adjacent to residential neighborhoods. Existing and future sensitive receptors within the Plan Area would be exposed to operational noise from buildout under this alternative Similar to the proposed Specific Plan, development under this alternative would be subject to the El Monte General Plan's goals, policies, and Land Use and Noise Compatibility Guidelines. While noise levels would be reduced along Main Street since the traffic would be removed, it would incrementally increase noise on the surrounding roadways since cars would be using those streets instead of Main Street. However, inclusion of mitigation measures would reduce this impact to less than significant.

This alternative would contribute additional vehicle trips on roadways that generate noise levels of approximately 75 dBA. This alternative would require compliance with all of the same noise mitigation measures required for the proposed Specific Plan. Although this alternative's increase in operational noise levels would be reduced when compared to the proposed Specific Plan, traffic related noise impacts would remain significant and unavoidable.

Population and Housing. Under this alternative, the potential net increase of housing units and commercial square footage would be the same as the proposed Specific Plan, and therefore, impacts on population and housing was be same as well.

Public Services and Recreation. This alternative would result in the same net increase in residential units, population, commercial square footage, and jobs as the proposed Specific Plan at buildout. Therefore, the demand for police and fire protection, parks and recreation, and libraries would be the same as the Specific Plan. Since the same number of new students are projected under this alternative as the proposed Specific Plan, impacts on schools would also be the same.

Transportation and Circulation. Alternative 4 would have the same net increase in housing units and commercial building space as the proposed Specific Plan, and therefore, the increase in the number of daily trips generated would also be the same at 21,372.

Utilities and Service Systems. Since the level of development under Alternative 4, Complete Streets would be the same as the proposed Specific Plan; the impact on public utilities would also be the same. Development under this alternative would consume the same amount of water, generate the same amount of wastewater that would need to be treated, and generate the same amount of solid waste to be disposed of at local landfills as the proposed Specific Plan. Impacts would be less than significant and the same as the proposed Specific Plan.

D. Environmentally Superior Alternative

CEQA requires the identification of the environmentally superior alternative among the options studied. When the "No Project" alternative is determined to be environmentally superior, CEQA also requires identification of the environmentally superior alternative among the development options.

Table 4-6 indicates whether each alternative's environmental impact is greater than, lesser than, or similar to the proposed project. This comparison shows the No Project Alternative would avoid all of the proposed project impacts and would be environmentally superior to the proposed project. However, this alternative would not fulfill the project objectives.

Among the other alternatives being considered, the Reduced Density Alternative (Alternative 2) could be considered environmentally superior, as it would reduce impacts in many issue areas, primarily due to the smaller increase in housing units and commercial building space relative to the proposed Specific Plan. This alternative would also meet most of the project objectives but to a lesser extent than the proposed Specific Plan.

Table 4-6: Comparison of Environmental Impacts for Each Alternative

		Alternatives			
		1	2	3	4
Issue	Proposed Project	No Project	Reduced Density	Reduced Plan Area	Complete Streets Mobility
Aesthetics	*Less than Significant*	+	+	+	=
Air Quality	*Less than Significant*	+	+	+	+
Biological Resources	*Less than Significant with Mitigation*	+	=	=	=
Cultural Resources	*Less than Significant with Mitigation*	+	=	=	=
Geology and Soils	*Less than Significant with Mitigation*	+	+	+	=
Greenhouse Gas Emissions	*Less than Significant*	+	–	–	+
Hazards and Hazardous Materials	*Less than Significant with Mitigation*	+	+	+	=
Hydrology and Water Quality	*Less than Significant*	+	+	+	=
Land Use and Planning	*Less than Significant*	+	–	–	+

Table 4-6 (Cont.): Comparison of Environmental Impacts for Each Alternative

		Alternatives			
		1	2	3	4
Issue	Proposed Project	No Project	Reduced Density	Reduced Plan Area	Complete Streets Mobility
Noise	*Significant and Unavoidable*	+	+	+	=
Population and Housing	*Less than Significant*	+	+	+	=
Public Services	*Less than Significant*	+	+	+	=
Transportation and Circulation	*Less than Significant with Mitigation*	+	+	+	=
Utilities and Service Systems	*Less than Significant*	+	+	+	=
Overall	*N/A*	+	+	+	+

+ Superior to the proposed Specific Plan
– Inferior to the proposed Specific Plan
= Similar impact to the proposed Specific Plan

Chapter 5: CEQA Mandated Analysis

This section discusses other issues for which CEQA requires analysis in addition to the specific issue areas discussed in Section 3.0, Environmental Impact Analysis. These additional issues include: (1) the potential to induce growth, including the removal of obstacles to growth; (2) significant unavoidable impacts, and (3) irreversible impacts on the environment.

A. Growth Inducing Effects

CEQA Guidelines Section §15126.2(d) requires a discussion of the ways in which a project could foster economic or population growth, or the construction of additional housing, either directly or indirectly, in the surrounding environment. Included in this is the discussion of project characteristics which encourage and/or facilitate other activities that, individually or cumulatively, could have significant environmental effects. CEQA emphasizes that growth, in and of itself and in any area, should not be assumed to be necessarily beneficial, detrimental, or of little significance to the environment.

Generally speaking, a project may be considered growth inducing if it results in one of the three conditions identified below:

1. Induces population growth.
2. Induces economic expansion.
3. Removes an impediment to growth (e.g. the establishment of an essential public service or the provision of new access to an area not previously developed or entitled for development or encroachment or setting a precedent for actions that induce growth).

The impacts identified below are based on estimated buildout under the proposed Specific Plan.

Population and Employment Growth

As discussed in Chapter 2, Project Description, of the housing stock within the Plan Area, under the proposed Specific Plan buildout, development may result in a net increase of 2,200 residential units between 2015 and 2035. Based on the current City of El Monte household size and vacancy rate, the Plan Area is projected to experience a net increase of 8,465 residents and 2,054 households. Additionally, the implementation of the Specific Plan is projected to result in a net increase of 500,000 square feet of commercial building area. Assuming an average employment generation factor for commercial uses, buildout of the Specific Plan could generate a net increase of 1,235 jobs in the Plan Area by 2035.

The provision of housing opportunities associated with future development within the Plan Area and the resultant population growth would be consistent with SCAG regional growth forecasts for the City of El

Monte, San Gabriel Valley sub region and the six-county SCAG region. As presented in the Section 3.11, Population and Housing, the 8,465 new residents associated with Specific Plan buildout would represent 42.1 percent of the SCAG population growth forecast of 20,100 for the City between 2015 and 2035. The Specific Plan's net increase in households of 2,054 would represent 32.6 percent of SCAG's household forecast for the City, and the projected job growth would represent 19.6 percent of the SCAG employment growth forecast.

The additional commercial growth would provide both short-term and long-term job opportunities associated with construction and operation-related activities. These new job opportunities in the Plan Area would enhance services available to community and surrounding areas. However, the Specific Plan's potential to induce growth will not exceed what has already been projected for the City by the regional agencies, such as SCAG, and is considered less than significant.

The primary differences between buildout under the proposed Specific Plan and buildout under existing land use and zoning designations is that the mix, intensity, and placement of residential and commercial development would be more flexible than what the existing zoning would permit. Residential development under the Specific Plan would allow the redistribution of higher density residential and mixed use areas throughout the Plan Area, especially in the Station Sub-Area where stand-alone multi-family residential uses such as townhouses, studio flats, apartments, and mixed-use projects up to six stories would be allowed. In general, a greater portion of residential mixed-use and transit-oriented development would be expected under the proposed Specific Plan than could be accommodated under the existing El Monte General Plan and Zoning Ordinance.

Furthermore, the Specific Plan directs the housing, population, and employment growth into the downtown area of the City, which is highly urbanized and in the immediate vicinity of key transit centers. This emphasis towards infill development and recycling to higher densities of underutilized land is consistent with regional goals for reducing sprawl, facilitating transit and non-motorized transportation, and reducing vehicle trips. Additionally, the Specific Plan preparation and adoption is being paid for in part through a grant from METRO under their Transit Oriented Development funding program to provide for proper and up to date planning frameworks to support new and increased development around existing and planned transit stations in support of State and regional climate action plans, laws, and policies.

Removal of Impediments to Growth

As supported by the EIR analysis in Chapter 3: Environmental Impact Analysis, the additional development under 20-year Specific Plan buildout assumptions is not anticipated to require infrastructure improvements to the existing water and wastewater system in the Plan Area. The improvements that have been identified in the Specific Plan's Infrastructure Plan are those in the City's current Capital Improvement Program, which have been funded and approved by the City Council. These improvements address existing deficiencies of the Plan Area and will occur with or without the adoption of the proposed Specific Plan. Any future

infrastructure improvements would occur based on the future City infrastructure master plans and demand/capacity studies already required of project applicant on a project by project basis.

The potential circulation improvement projects identified in Section 3.13, Transportation/Traffic could present a potential removal of an impediment to growth. Also the traffic mitigation measures identified in the Transportation/Traffic section, as well as pedestrian and bicycle-friendly features included in the Specific Plan could result in decreased roadway congestion that in-turn could attract new growth because impediments due to limited roadway access would be reduced. However, the circulation improvement projects have not yet been programmed, and any future new growth would still be limited to the buildout constraints imposed by the Specific Plan. Therefore, improvements related to circulation and access, including those that may significantly reduce the level of traffic congestion, would have a less-than-significant impact on growth and would not induce or remove impediments to growth.

Furthermore, future developments would be reviewed by public agencies on a project-by-project basis, with approval based on the adequacy of public services and utilities serving the project site. The increased demands for public services and utilities and the associated costs would be provided through cooperative agreements between future developers and service agencies, and through added municipal revenues (development fees, and property and sales taxes) generated by each project. Thus, improvements and localized upgrades to the infrastructure system and to public services are considered to be a less-than-significant impact and would not induce or remove impediments to growth.

B. Significant Unavoidable Effects

CEQA Guidelines Section 15126(b) requires that an EIR identify those significant impacts that cannot be reduced to a less than significant level with the application of mitigation measures. Where the impacts cannot be reduced to less than significant levels, the implications and reasons why the project is being proposed, notwithstanding these effects, is described. Potential environmental impacts were assessed in Chapter 3: Environmental Analysis. Based on the assessment of each environmental issue, the implementation of the proposed Specific Plan would result in operational emissions that would exceed SCAQMD's daily thresholds of operational air quality emission of ROG, CO, NOX, PM10 and PM2.5 , and therefore, it would be considered a significant and unavoidable impact.

C. Significant Irreversible Environmental Effects

CEQA Guidelines Section 15126(c) requires a discussion of any significant irreversible environmental changes which would be caused by the proposed Specific Plan should it be implemented. Such significant irreversible environmental changes may include the following:

- Use of non-renewable resources during the initial and continued phases of the project which would be irreversible because a large commitment of such resources makes removal or non-use unlikely.

- Primary impacts and, particularly, secondary impacts (such as highway improvement which provides access to a previously inaccessible area) which generally commit future generations to similar uses.
- Irreversible damage which may result from environmental accidents associated with the project.

The 20-year buildout of the Specific Plan would result in the commitment of nonrenewable resources throughout the buildout construction period and ongoing operation. During construction, the use of building materials (e.g., aggregate, sand, cement, steel, glass, etc.) and energy resources (e.g., gasoline, diesel fuel, electricity) largely would be irreversible and irretrievable. Energy would be consumed in processing building materials and for transporting these materials and construction workers to the project site. Construction of some of the larger developments and facilities would generally commit future generations to similar uses at those locations for an extended period of time. No environmental accidents that could result in area-wide irreversible damage are expected as a result of the provisions of the proposed Specific Plan. In summary, buildout under the proposed Specific Plan would not result in a substantially different environment than that allowed through buildout of the existing General Plan and zoning districts.

However, certain irreversible environmental effects cannot be avoided. In particular, construction activity that would be accommodated under Specific Plan buildout would involve the use of building materials and energy, some of which are non-renewable resources. The potential development of 2,200 net new residential units and 500,000 square feet of net new commercial building area in the Plan Area under buildout conditions would irreversibly increase local demand for non-renewable energy resources. However, consumption of these resources would occur with any development in the City of El Monte and are not unique to the Plan Area.

Resources consumed during occupation and operation of buildout development (such as fuel, water, etc.) will be used in quantities proportional to similar development in Southern California. Title 24 (Part 6 of the California Building Standards Code) energy conservation standards are mandatory and will be applied to Plan Area project's construction and operation. The Plan Area residents and employees would consume fuel and water; however, these activities are part of normal operations and are not considered a wasteful use of resources. The nonrenewable resources consumed for this Specific Plan are comparable to the use of resources for similar reuse and development projects in other cities throughout the region. Increasingly efficient building fixtures and automobile engines, and the implementation of strategies included in the proposed Specific Plan to encourage non-vehicle transportation, such as walking and biking, are expected to offset to some degree the demand for non-renewable resources. Nevertheless, it is not anticipated that growth accommodated under the Specific Plan would affect local or regional energy supplies.

Growth accommodated under the Specific Plan would require a commitment of additional public services and utilities. These impacts are discussed in Chapter 3: Environmental Analysis. However, there commitments may be partially reversible, especially as technological advancements continue to improve on conservation of water and energy usage.

Chapter 6: EIR Preparers

CITY OF EL MONTE (Lead Agency)

Jesus Gomez	City Manager
Alex Hamilton	Assistant City Manager
Minh Thai	Economic Development Director
Jason Mikaelian	City Planner
Elaine Jeng	Public Works Director
Ms. Paula Kelly	Contract Planner

EVAN BROOKS ASSOCIATES

Mr. Hal Suetsugu	Principal and Project Manager
Mr. John Oshimo	Senior Environmental Planner
Ms. Juliet M. Arroyo	Senior Environmental Planner
Mr. Jorge Zarza	Associate Environmental Planner
Mr. M. Yunus Rahi	Traffic Engineer

RINCON CONSULTANTS, INC.

Mr. Joe Powers	Principal
Ms. Sara Tistaert	Project Manager
Ms. Sarah Sorenson	Associate Environmental Planner
Mr. Nikolas Kilpileinen	Associate Environmental Planner